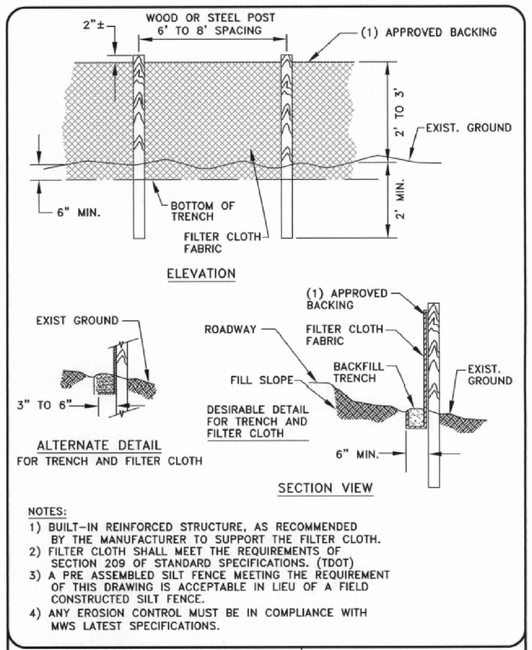

NOTES:
1) BUILT-IN REINFORCED STRUCTURE, AS RECOMMENDED BY THE MANUFACTURER TO SUPPORT THE FILTER CLOTH.
2) FILTER CLOTH SHALL MEET THE REQUIREMENTS OF SECTION 209 OF STANDARD SPECIFICATIONS. (TDOT)
3) A PRE ASSEMBLED SILT FENCE MEETING THE REQUIREMENT OF THIS DRAWING IS ACCEPTABLE IN LIEU OF A FIELD CONSTRUCTED SILT FENCE.
4) ANY EROSION CONTROL MUST BE IN COMPLIANCE WITH MWS LATEST SPECIFICATIONS.

METRO WATER SERVICES

TYPICAL TEMPORARY SILT FENCE

NOT TO SCALE | DATE: 05/05/08 | METRO WATER SERVICES

DWG. NO. SDET012

Hal Batthop
LICENSED COLLECTION OPERATOR

DIRECTOR OF WATER AND SEWERAGE SERVICES

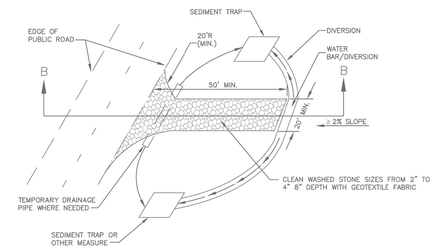

PLAN VIEW OF TEMPORARY CONSTRUCTION ROAD

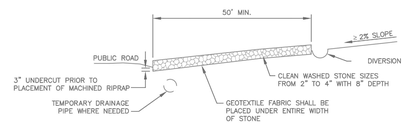

SECTION B–B

CONSTRUCTION EXIT

ACTIVITY: Check Dams | TCP – 12

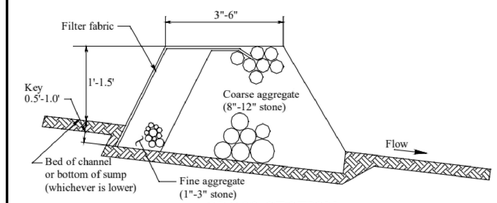

CROSS-SECTION
N.T.S.

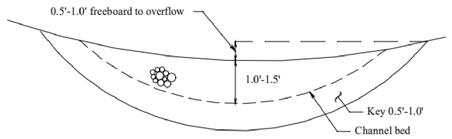

ELEVATION
N.T.S.

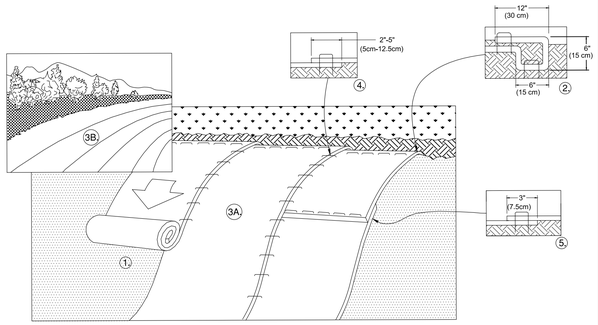

1. PREPARE SOIL BEFORE INSTALLING BLANKETS, INCLUDING ANY NECESSARY APPLICATION OF LIME, FERTILIZER, AND SEED. NOTE: WHEN USING CELL-O-SEED DO NOT SEED PREPARED AREA. CELL-O-SEED MUST BE INSTALLED WITH PAPER SIDE DOWN.
2. BEGIN AT THE TOP OF THE SLOPE BY ANCHORING THE BLANKET IN A 6" (15cm) DEEP X 6" (15cm) WIDE TRENCH WITH APPROXIMATELY 12" (30cm) OF BLANKET EXTENDED BEYOND THE UP-SLOPE PORTION OF THE TRENCH. ANCHOR THE BLANKET WITH A ROW OF STAPLES/STAKES APPROXIMATELY 12" (30cm) APART IN THE BOTTOM OF THE TRENCH. BACKFILL AND COMPACT THE TRENCH AFTER STAPLING. APPLY SEED TO COMPACTED SOIL AND FOLD REMAINING 12" (30cm) PORTION OF BLANKET BACK OVER SEED AND COMPACTED SOIL. SECURE BLANKET OVER COMPACTED SOIL WITH A ROW OF STAPLES/STAKES SPACED APPROXIMATELY 12" (30cm) APART ACROSS THE WIDTH OF THE BLANKET.
3. ROLL THE BLANKETS (A.) DOWN OR (B.) HORIZONTALLY ACROSS THE SLOPE. BLANKETS WILL UNROLL WITH APPROPRIATE SIDE AGAINST THE SOIL SURFACE. ALL BLANKETS MUST BE SECURELY FASTENED TO SOIL SURFACE BY PLACING STAPLES/STAKES IN APPROPRIATE LOCATIONS AS SHOWN IN THE STAPLE PATTERN GUIDE. WHEN USING OPTIONAL DOT SYSTEM™, STAPLES/STAKES SHOULD BE PLACED THROUGH EACH OF THE COLORED DOTS CORRESPONDING TO THE APPROPRIATE STAPLE PATTERN.
4. THE EDGES OF PARALLEL BLANKETS MUST BE STAPLED WITH APPROXIMATELY 2"-5" (5cm-12.5cm) OVERLAP DEPENDING ON BLANKET TYPE. TO ENSURE PROPER SEAM ALIGNMENT, PLACE THE EDGE OF THE OVERLAPPING BLANKET (BLANKET BEING INSTALLED ON TOP) EVEN WITH THE COLORED SEAM STITCH™ ON THE PREVIOUSLY INSTALLED BLANKET.
5. CONSECUTIVE BLANKETS SPLICED DOWN THE SLOPE MUST BE PLACED END OVER END (SHINGLE STYLE) WITH AN APPROXIMATE 3" (7.5cm) OVERLAP. STAPLE THROUGH OVERLAPPED AREA, APPROXIMATELY 12" (30cm) APART ACROSS ENTIRE BLANKET WIDTH.

NOTE:
*IN LOOSE SOIL CONDITIONS, THE USE OF STAPLE OR STAKE LENGTHS GREATER THAN 6" (15cm) MAY BE NECESSARY TO PROPERLY SECURE THE BLANKETS.

EROSION CONTROL MATTING DETAIL

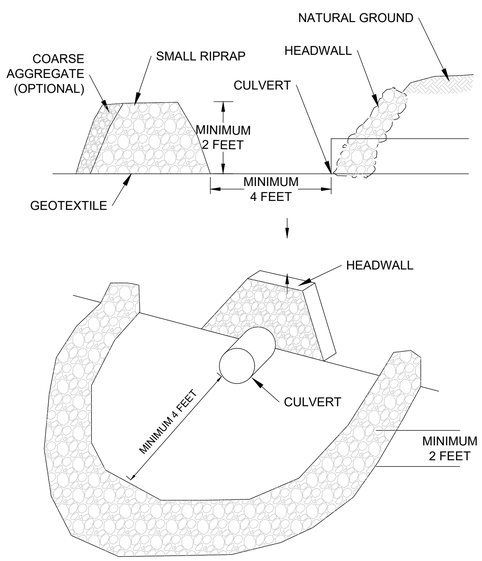

FILTER RING (FR)

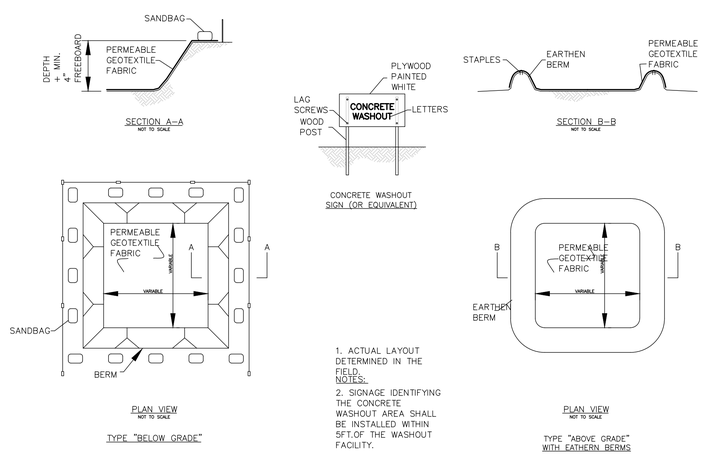

1. ACTUAL LAYOUT DETERMINED IN THE FIELD.
NOTES:
2. SIGNAGE IDENTIFYING THE CONCRETE WASHOUT AREA SHALL BE INSTALLED WITHIN 5FT.OF THE WASHOUT FACILITY.

CONCRETE WASHOUT

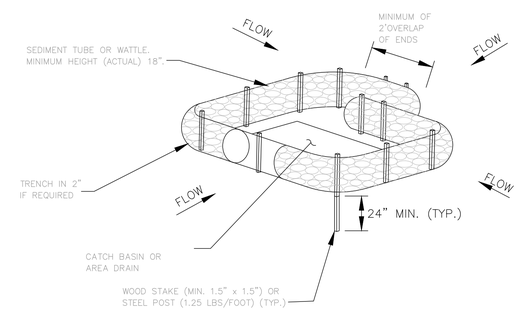

CATCH BASIN PROTECTION (TYPE D)

CASE NUMBER
2019S-081-001
OWNER OF RECORD
1201 NEELY'S BEND ROAD, LLC TAX MAP 52, PARCEL 20.00, 24.00, 25.00, 26.00 & 42.00
APPLICANT
T-SQUARE ENGINEERING 701 WEST MAIN ST FRANKLIN, TN 37064 615.678.8212

REVISIONS

NO.	DATE

DATE: 8/21/2019
SCALE: AS SHOWN
DRAWN BY: T-SQUARE
REVIEWER: TET

DETAILS
1201 NEELY'S BEND ROAD
MADISON, TN 37115

FOX VALLEY SUBDIVISION

TIMOTHY E. TURNER
REGISTERED ENGINEER
AGRICULTURE
STATE OF TENNESSEE

8/21/2019

PROJECT
18-1003

SHEET
C-8.0

T-SQUARE ENGINEERING
701 WEST MAIN STREET • FRANKLIN, TN • 615-678-8212 • WWW.T2-ENG.COM