State of Tennessee
Department of Environment and Conservation
Division of Air Pollution Control
William R. Snodgrass Tennessee Tower
312 Rosa L. Parks Avenue, 15th Floor
Nashville, TN 37243
Telephone: (615) 532-0554

APC 100

APC RCVD
18 JAN 2018 PM 1:06

NON-TITLE V PERMIT APPLICATION
FACILITY IDENTIFICATION

Please type or print and submit in duplicate for each emission source. Attach appropriate source description forms.

SITE INFORMATION

1. **Organization's legal name** THOMAS & BETTS CORPORATION		For APC use only	APC Company point no. 54-0047
2. **Site name** (if different from legal name)			APC Log/Permit no.
3. **Site address** (St./Rd./Hwy.) 260 DENNIS STREET			County name MCMINN
City or distance to nearest town ATHENS	Zip code 37303		4. NAICS or SIC code 335932
5. **Site location** (in lat. /long.)	Latitude 35.457389		Longitude 84.604261

CONTACT INFORMATION (RESPONSIBLE PERSON)

6. **Responsible person/Authorized contact** CHUCK GILREATH			Phone number with area code 423-745-6588
Mailing address (St./Rd./Hwy.) 260 DENNIS STREET			Fax number with area code 423-745-9545
City ATHENS	State TN	Zip code 37303	Email address CHUCK.GILREATH@TNB.COM

CONTACT INFORMATION (TECHNICAL)

7. **Principal technical contact** LISA NEISLER			Phone number with area code 423-745-6588
Mailing address (St./Rd./Hwy.) 260 DENNIS STREET			Fax number with area code 423-745-9545
City ATHENS	State TN	Zip code 37303	Email address LISA.NEISLER@TNB.COM

CONTACT INFORMATION (BILLING)

8. **Billing contact** ACCOUNTS PAYABLE			Phone number with area code 423-745-6588
Mailing address (St./Rd./Hwy.) 260 DENNIS STREET			Fax number with area code 423-745-9545
City ATHENS	State TN	Zip code 37303	Email address

EMISSION SOURCE INFORMATION

9. **Emission source no.** (number which uniquely identifies this source)
L-47876

10. **Brief description of emission source**
BOILER #3 & #4
NATURAL GAS ONLY
6.275 MMBtu/hr./each boiler

11. **Normal operation:**	Hours/Day 24	Days/Week 7	Weeks/Year 52	Days/Year 365
12. **Percent annual throughput**	Dec. – Feb. 25	March – May 25	June – August 25	Sept. – Nov. 25

(Over)

TYPE OF PERMIT REQUESTED

13. Operating permit ( )	Date construction started	Date completed	Last permit no.	Emission source reference number
Construction permit (X)	Last permit no.		Emission source reference number	

If you choose Construction permit, then choose either New Construction, Modification, or Location transfer

	New Construction (X)	Starting date 6-10-18	Completion date
	Modification ( )	Date modification started or will start	Date completed or will complete
	Location transfer ( )	Transfer date	Address of last location

14. Describe changes that have been made to this equipment or operation since the last construction or operating permit application:

SIGNATURE

Based upon information and belief formed after a reasonable inquiry, I, as the responsible person of the above mentioned facility, certify that the information contained in this application and any attached application(s) is accurate and true to the best of my knowledge. As specified in TCA Section 39-16-702(a)(4), this declaration is made under penalty of perjury.

15. Signature (application must be signed before it will be processed)		**Date**
Chuck Gilreath		1/9/18
Signer's name (type of print)	**Title**	**Phone number with area code**
CHUCK GILREATH	PLANT MANAGER	423-745-6588

Table of Pollution Reduction Device or Method Codes

Note: For cyclones, settling chambers, wet scrubbers, and electrostatic precipitators; the efficiency ranges correspond to the following percentages:
High: 95-99+%. Medium: 80-95% And Low: Less than 80%.
If the system has several pieces of connected control equipment, indicate the sequence. For example: 008'010.97%
If none of the below codes fit, use 999 as a code for other and specify in the comments.

No Equipment....000
Activated Carbon Adsorption....048
Afterburner – Direct Flame....021
Afterburner – Direct Flame with Heat Exchanger....022
Afterburner – Catalytic....019
Afterburner – Catalytic with Heat Exchanger....020
Alkalized Alumina....040
Catalytic Oxidation – Flue Gas Desulfurization....039
Cyclone – High Efficiency....007
Cyclone – Medium Efficiency....008
Cyclone – Low Efficiency....009
Dust Suppression by Chemical Stabilizers or Wetting Agents....062
Electrostatic Precipitator – High Efficiency....010
Electrostatic Precipitator – Medium Efficiency....011
Electrostatic Precipitator – Low Efficiency....012
Fabric Filter – High Temperature....016
Fabric Filter – Medium Temperature....017
Fabric Filter – Low Temperature....018
Fabric Filter – Metal Screens (Cotton Gins)....059
Flaring....023
Gas Adsorption Column -- Packed....050
Gas Adsorption Column – Tray Type....051
Gas Scrubber (General: Not Classified)....013
Limestone Injection – Dry....041
Limestone Injection – Wet....042
Liquid Filtration System....049
Mist Eliminator – High Velocity....014
Mist Eliminator – Low Velocity....015
Process Change....046
Process Enclosed....054
Process Gas Recovery....060
Settling Chamber – High Efficiency....004
Settling Chamber – Medium Efficiency....005
Settling Chamber – Low Efficiency....006
Spray Tower (Gaseous Control Only)....052
Sulfuric Acid Plant – Contact Process....043
Sulfuric Acid Plant – Double Contact Process....044
Sulfur Plant....045
Vapor Recovery System (Including Condensers, Hooding and Other Enclosures)....047
Venturi Scrubber (Gaseous Control Only)....053
Wet Scrubber – High Efficiency....001
Wet Scrubber – Medium Efficiency....002
Wet Scrubber – Low Efficiency....003
Wet Suppression by Water Sprays....061

Table of Emission Estimation Method Codes

Not application / Emissions are known to be zero....0
Emissions based on source testing....1
Emissions based on material balance using engineering expertise and knowledge of process....2
Emissions calculated using emission factors from EPA publications No. AP-42 Compilation of Air Pollution Emissions Factors....3
Judgment....4
Emissions calculated using a special emission factor different from that in AP-42....5
Other (Specify in comments)....6

State of Tennessee
Department of Environment and Conservation
Division of Air Pollution Control
William R. Snodgrass Tennessee Tower
312 Rosa L. Parks Avenue, 15th Floor
Nashville, TN 37243
Telephone: (615) 532-0554

NON-TITLE V PERMIT APPLICATION
EMISSION POINT DESCRIPTION

Please type or print and submit in duplicate for each stack or emission source. Attach to the Non-Title V Facility Identification Form (APC 100).

GENERAL IDENTIFICATION AND DESCRIPTION

1. Organization name THOMAS & BETTS CORPORATION		For APC use only	APC Company point no. 54-0047
2. Emission source no. (As on Non-Title V Facility Identification Form) L-47876	Flow diagram point number		APC Log/Permit no.
3. Brief emission point description (Attach a sketch if appropriate): BOILER #3 NATURAL GAS ONLY 6.275 MMBtu/hr.			Distance to nearest property line (Ft.)

STACK AND EMISSION DATA

4. Stack or emission point data: →	Height above grade (Ft.) 28	Diameter (Ft.) 1.333	Temperature (°F)	% of time over 125°F	Direction of exit (Up, down or horizontal) UP
Data at exit conditions: →	Flow (actual $Ft.^3$/Min.)	Velocity (Ft./Sec.)	Moisture (Grains/$Ft.^3$)		Moisture (Percent)
Data at standard conditions: →	Flow (Dry std. $Ft.^3$/Min.)	Velocity (Ft./Sec.)	Moisture (Grains/$Ft.^3$)		Moisture (Percent)

5. Air contaminants	Actual emissions						
	Emissions (Lbs./Hr.)						
	Average	Maximum	Concentration	Avg. emissions (Tons/Yr.)	Emissions est. method code	Control devices *	Control efficiency%
Particulate matter		0.04675	**	0.205	3	000	
Sulfur dioxide (SO_2)		0.00555	***	0.0245			
Carbon monoxide (CO)		0.515	PPM	2.2635			
Organic compounds		0.03385	PPM	0.148			
Nitrogen oxides (NO_X)		0.615	PPM	2.6945			
Fluorides							
Greenhouse gases (CO_2 equivalents)							
Hazardous air pollutant (specify)	SEE	ATTACHED	TABLE				
Hazardous air pollutant (specify)							
Other (specify)							
Other (specify)							
Other (specify)							

(Over)

6. Check types of monitoring and recording instruments that are attached: Opacity monitor ( ), SO_2 monitor ( ), NO_X monitor ( ), Other (specify in comments) ( )	
7. Comments	
8. Control device or Method code description:	Description of operating parameters of device (flow rate, temperature, pressure drop, etc.): N/A

* Refer to the tables below for estimation method and control device codes.

** Exit gas particulate matter concentration units: Process – Grains/Dry Standard Ft^3 (70^0F), Wood fired boilers - Grains/Dry Standard Ft^3 (70^0F), all other boilers – Lbs. /Million BTU heat input.

*** Exit gas sulfur dioxide concentrations units: Process – PPM by volume, dry bases, and boilers – Lbs. /Million BTU heat input

Table of Pollution Reduction Device or Method Codes
(Alphabetical listing)

Note: For cyclones, settling chambers, wet scrubbers, and electrostatic precipitators; the efficiency ranges correspond to the following percentages:
High: 95-99+%. Medium: 80-95% And Low: Less than 80%.
If the system has several pieces of connected control equipment, indicate the sequence. For example: 008'010.97%
If none of the below codes fit, use 999 as a code for other and specify in the comments.

No Equipment....000
Activated Carbon Adsorption....048
Afterburner – Direct Flame....021
Afterburner – Direct Flame with Heat Exchanger....022
Afterburner – Catalytic....019
Afterburner – Catalytic with Heat Exchanger....020
Alkalized Alumina....040
Catalytic Oxidation – Flue Gas Desulfurization....039
Cyclone – High Efficiency....007
Cyclone – Medium Efficiency....008
Cyclone – Low Efficiency....009
Dust Suppression by Chemical Stabilizers or Wetting Agents 062
Electrostatic Precipitator – High Efficiency....010
Electrostatic Precipitator – Medium Efficiency....011
Electrostatic Precipitator – Low Efficiency....012
Fabric Filter – High Temperature....016
Fabric Filter – Medium Temperature....017
Fabric Filter – Low Temperature....018
Fabric Filter – Metal Screens (Cotton Gins)....059
Flaring....023
Gas Adsorption Column -- Packed....050
Gas Adsorption Column – Tray Type....051
Gas Scrubber (General: Not Classified)....013
Limestone Injection – Dry....041
Limestone Injection – Wet....042
Liquid Filtration System....049
Mist Eliminator – High Velocity....014
Mist Eliminator – Low Velocity....015
Process Change....046
Process Enclosed....054
Process Gas Recovery....060
Settling Chamber – High Efficiency....004
Settling Chamber – Medium Efficiency....005
Settling Chamber – Low Efficiency....006
Spray Tower (Gaseous Control Only)....052
Sulfuric Acid Plant – Contact Process....043
Sulfuric Acid Plant – Double Contact Process....044
Sulfur Plant....045
Vapor Recovery System (Including Condensers, Hooding and Other Enclosures)....047
Venturi Scrubber (Gaseous Control Only)....053
Wet Scrubber – High Efficiency....001
Wet Scrubber – Medium Efficiency....002
Wet Scrubber – Low Efficiency....003
Wet Suppression by Water Sprays....061

Table of Emission Estimation Method Codes

Not application / Emissions are known to be zero....0
Emissions based on source testing....1
Emissions based on material balance using engineering expertise and knowledge of process....2
Emissions calculated using emission factors from EPA publications No. AP-42 Compilation of Air Pollution Emissions Factors....3
Judgment....4
Emissions calculated using a special emission factor different from that in AP-42....5
Other (Specify in comments)....6

Air Emissions from Natural Gas Boilers

Natural Gas (<100 million BTU/hr)

Enter maximum heat input (BTU rating)	**6,275,000**	BTU/hour
Enter total hours operated	**8,760**	hours/year
Total cubic feet of natural gas burned	**53,891,176**	cubic feet/year = (BTU/hr * hrs/yr) / 1020 BTU/cu ft

Facility name:
Facility AQ ID:

Emissions

Source: EPA AP-42 Chapter 1.4

Pollutant	b Boiler hourly natural gas usage[1] (cu ft/hr) (BTU/hr) / (1020 BTU/cu ft)	c Hours in a Year (hr/yr) 24 hrs/day * 365 days/yr	d Emission Factor (lbs/cu ft)	e Actual natural gas burned (cu ft/yr)	Potential Emissions (ton/yr) (b * c * d) / 2000	Insignificant activity threshold[2] (ton/yr)	Actual Emissions (tons/yr) (d * e / 2000
PM	6152	8760	0.0000076	53,891,176	**0.20**	**1**	**0.20**
PM10	6152	8760	0.0000076	53,891,176	**0.20**	**1**	**0.20**
VOC	6152	8760	0.0000055	53,891,176	**0.15**	**1**	**0.15**
SOx	6152	8760	0.0000006	53,891,176	**0.02**	**1**	**0.02**
NOx	6152	8760	0.0001	53,891,176	**2.69**	**1**	**2.69**
CO	6152	8760	0.000084	53,891,176	**2.26**	**2**	**2.26**
Lead	6152	8760	0.0000000005	53,891,176	**0.00**	**n/a**	**0.00**
GHG Total (CO_2e)	*see calculations below*				**3237**	**1000**	**3237**

Green House Gas (GHG) Emissions (CO_2e)

Sources: EPA AP-42 Chapter 1.4
74 FR 209 (30 Oct 2009), pages 56409-56410

Pollutant	a Global Warming Potential[3]	b Boiler hourly natural gas usage[1] (cu ft/hr) (BTU/hr) / (1020 BTU/cu ft)	c Hours in a Year (hr/yr) 24 hrs/day * 365 days/yr	d Emission Factor (lbs/cu ft)	e Annual actual natural gas burned cu ft/yr)	Potential Emissions (ton/yr) (a * b * c * d) / 2000	Insignificant Activity (ton/yr)	Actual Emissions (tons/yr) (a * d * e) / 2000
CO_2	1	6152	8760	0.120	53,891,176	**3233**	**n/a**	**3233**
CH_4	25	6152	8760	0.00000231	53,891,176	**2**	**n/a**	**1.6**
N_2O	298	6152	8760	0.000000231	53,891,176	**2**	**n/a**	**1.9**
					Green House Gas Total (CO_2e)	**3237**	**1000**	**3237**

[1]Heat value of natural gas is 1020 BTU/cubic foot according to EPA AP-42 Chapter 1.4
[2]Insignificant Activity from MN Rule 7007.1300, subp. 3, I. If potential emissions are below the insignificant activity threshold, they do not need to be included in the total.
[3]Global Warming Potential from 40 CFR Part 98, as revised in the Federal Register, Vol. 78, No. 230, p. 71909, November 29, 2013.
CO_2e = carbon dioxide equivalents

State of Tennessee
Department of Environment and Conservation
Division of Air Pollution Control
William R. Snodgrass Tennessee Tower
312 Rosa L. Parks Avenue, 15th Floor
Nashville, TN 37243
Telephone: (615) 532-0554

NON-TITLE V PERMIT APPLICATION
PROCESS OR FUEL BURNING SOURCE DESCRIPTION

Please type or print and submit in duplicate and attach to the Non-Title V Facility Identification Form (APC 100).

GENERAL IDENTIFICATION AND DESCRIPTION

1. Organization name THOMAS & BETTS CORPORATION	For APC use only	APC Company – Point no.
2. Emission source no. (As on Non-Title V Facility Identification Form) L-47876		APC Log/Permit no.

3. Description of process unit

BOILER #3-CLEAVER BROOKS CB PACKAGED BOILER-MANUFACTURE DATE 7/18/1969
NATURAL GAS ONLY
6.275 MMBtu/hr.

PROCESS SOURCE DESCRIPTION AND DATA

4. Type of source	(Check only one option below)
Process Source: Apply for a separate Permit for each source. (Check at right and complete lines 5, 6, and 11)	( )
Process Source with in process fuel: Products of combustion contact materials heated. Apply for a separate permit for each source. (Check at right and complete lines 5, 6, and 8 through 11)	( )
Non-Process fuel burning source: Products of combustion do not contact materials heated. Complete this form for each boiler or fuel burner and complete a Non-Title V Emission Point Description Form (APC 101) for each stack. (Check at right and complete lines 7 to 11)	(X)

5. Type of operation:	Normal batch time	Normal batches/day
Continuous (X) Batch ( )		

6. Process material inputs and In-process solid fuels	Diagram reference	Input rates (pounds/hour)	
		Design	Actual
A.			
B.			
C.			
D.			
E.			
F.			
G.			
Totals			

*** A simple process flow diagram must be attached.**

(Over)

BOILER, BURNER, GENERATOR, OR SIMILAR FUEL BURNING PROCESS DESCRIPTION

7. Boiler or burner data: (Complete lines 7 to 11 using a separate form for each boiler, burner, etc.)

Number	Stack number**	Type of firing***	Rated horsepower	Rated input capacity (10^6 BTU/Hr.)	Other rating (specify capacity and units)
CB-786-150	3	gas burner	150	6.275	

Serial no.	Date constructed	Date manufactured	Date of last modification (explain in comments below)
L-47876		7/18/1969	

** Source with a common stack will have the same stack number.
*** Cyclone, spreader (with or without reinjection), pulverized (wet or dry bottom, with or without reinjection), other stoker (specify type, hand fired, automatic, or other type (describe below in comments).

FUEL USED IN BOILER, BURNER, GENERATOR, OR SIMILAR FUEL BURNING SOURCE

8. Fuel data: (Complete for a process source with in process fuel or a non-process fuel burning source)

Primary fuel type (specify) NATURAL GAS

Standby fuel type(s) (specify) N/A

Fuels used	Annual usage	Hourly usage		% Sulfur	% Ash	BTU value of fuel		(For APC use only) SCC code
		Design	Average					
Natural gas:	10^6 Cu. Ft. 53.892	Cu. Ft. 6152	Cu. Ft.	/ / / / / / / /	/ / / / /	1,000		
#2 Fuel oil:	10^3 Gal.	Gal.	Gal.		/ / / / /			
#5 Fuel oil:	10^3 Gal.	Gal.	Gal.		/ / / / /			
#6 Fuel oil:	10^3 Gal.	Gal.	Gal.		/ / / / /			
Coal:	Tons	Lbs.	Lbs.					
Wood:	Tons	Lbs.	Lbs.	/ / / / / / / /	/ / / / /			
Liquid propane:	10^3 Gal.	Gal.	Gal.	/ / / / / / / /	/ / / / /	85,000		
Other (specify type & units):								

9. If Wood is used as a fuel, specify types and estimate percent by weight of bark

N/A

10. If Wood is used with other fuels, specify percent by weight of wood charged to the burner.

N/A

11. Comments

The Model CB786-150 boiler is a packaged firetube boiler of welded steel construction and consists of a pressure vessel, burner, burner controls, forced draft fan, damper, air pump, refractory, and appropriate boiler trim. The CB700 Series is Natural Gas Fired Only. The Model CB786-150 is the 150 HP model.

State of Tennessee
Department of Environment and Conservation
Division of Air Pollution Control
William R. Snodgrass Tennessee Tower
312 Rosa L. Parks Avenue, 15th Floor
Nashville, TN 37243
Telephone: (615) 532-0554

NON-TITLE V PERMIT APPLICATION
EMISSION POINT DESCRIPTION

Please type or print and submit in duplicate for each stack or emission source. Attach to the Non-Title V Facility Identification Form (APC 100).

GENERAL IDENTIFICATION AND DESCRIPTION

1. Organization name THOMAS & BETTS CORPORATION		For APC use only	APC Company point no.
2. Emission source no. (As on Non-Title V Facility Identification Form) L-47356	Flow diagram point number		APC Log/Permit no.
3. Brief emission point description (Attach a sketch if appropriate): BOILER #4 NATURAL GAS ONLY 6.275 MMBtu/hr.			Distance to nearest property line (Ft.)

STACK AND EMISSION DATA

4. Stack or emission point data: →	Height above grade (Ft.) 28	Diameter (Ft.) 1.333	Temperature (°F)	% of time over 125°F	Direction of exit (Up, down or horizontal) UP
Data at exit conditions: →	Flow (actual $Ft.^3$/Min.)	Velocity (Ft./Sec.)	Moisture (Grains/$Ft.^3$)		Moisture (Percent)
Data at standard conditions: →	Flow (Dry std. $Ft.^3$/Min.)	Velocity (Ft./Sec.)	Moisture (Grains/$Ft.^3$)		Moisture (Percent)

5. Air contaminants	Actual emissions						
	Emissions (Lbs./Hr.)						
	Average	Maximum	Concentration	Avg. emissions (Tons/Yr.)	Emissions est. method code	Control devices *	Control efficiency%
Particulate matter		0.04675	**	0.205	3	000	
Sulfur dioxide (SO_2)		0.00555	***	0.0245			
Carbon monoxide (CO)		0.515	PPM	2.2635			
Organic compounds		0.03385	PPM	0.148			
Nitrogen oxides (NO_X)		0.615	PPM	2.6945			
Fluorides							
Greenhouse gases (CO_2 equivalents)							
Hazardous air pollutant (specify)	SEE	ATTACHED	TABLE				
Hazardous air pollutant (specify)							
Other (specify)							
Other (specify)							
Other (specify)							

(Over)

6. **Check types of monitoring and recording instruments that are attached:** Opacity monitor ( ), SO_2 monitor ( ), NO_X monitor ( ), Other (specify in comments) ( )	
7. **Comments**	
8. Control device or Method code description:	Description of operating parameters of device (flow rate, temperature, pressure drop, etc.): N/A

* Refer to the tables below for estimation method and control device codes.

** Exit gas particulate matter concentration units: Process – Grains/Dry Standard Ft^3 (70^0F), Wood fired boilers - Grains/Dry Standard Ft^3 (70^0F), all other boilers – Lbs. /Million BTU heat input.

*** Exit gas sulfur dioxide concentrations units: Process – PPM by volume, dry bases, and boilers – Lbs. /Million BTU heat input

Table of Pollution Reduction Device or Method Codes
(Alphabetical listing)

Note: For cyclones, settling chambers, wet scrubbers, and electrostatic precipitators; the efficiency ranges correspond to the following percentages:
High: 95-99+%. Medium: 80-95% And Low: Less than 80%.
If the system has several pieces of connected control equipment, indicate the sequence. For example: 008'010,97%
If none of the below codes fit, use 999 as a code for other and specify in the comments.

No Equipment....000
Activated Carbon Adsorption....048
Afterburner – Direct Flame....021
Afterburner – Direct Flame with Heat Exchanger....022
Afterburner – Catalytic....019
Afterburner – Catalytic with Heat Exchanger....020
Alkalized Alumina....040
Catalytic Oxidation – Flue Gas Desulfurization....039
Cyclone – High Efficiency....007
Cyclone – Medium Efficiency....008
Cyclone – Low Efficiency....009
Dust Suppression by Chemical Stabilizers or Wetting Agents 062
Electrostatic Precipitator – High Efficiency....010
Electrostatic Precipitator – Medium Efficiency....011
Electrostatic Precipitator – Low Efficiency....012
Fabric Filter – High Temperature....016
Fabric Filter – Medium Temperature....017
Fabric Filter – Low Temperature....018
Fabric Filter – Metal Screens (Cotton Gins)....059
Flaring....023
Gas Adsorption Column -- Packed....050
Gas Adsorption Column – Tray Type....051
Gas Scrubber (General: Not Classified)....013
Limestone Injection – Dry....041
Limestone Injection – Wet....042
Liquid Filtration System....049
Mist Eliminator – High Velocity....014
Mist Eliminator – Low Velocity....015
Process Change....046
Process Enclosed....054
Process Gas Recovery....060
Settling Chamber – High Efficiency....004
Settling Chamber – Medium Efficiency....005
Settling Chamber – Low Efficiency....006
Spray Tower (Gaseous Control Only)....052
Sulfuric Acid Plant – Contact Process....043
Sulfuric Acid Plant – Double Contact Process....044
Sulfur Plant....045
Vapor Recovery System (Including Condensers, Hooding and Other Enclosures)....047
Venturi Scrubber (Gaseous Control Only)....053
Wet Scrubber – High Efficiency....001
Wet Scrubber – Medium Efficiency....002
Wet Scrubber – Low Efficiency....003
Wet Suppression by Water Sprays....061

Table of Emission Estimation Method Codes

Not application / Emissions are known to be zero....0
Emissions based on source testing....1
Emissions based on material balance using engineering expertise and knowledge of process....2
Emissions calculated using emission factors from EPA publications No. AP-42 Compilation of Air Pollution Emissions Factors....3
Judgment....4
Emissions calculated using a special emission factor different from that in AP-42....5
Other (Specify in comments)....6

Air Emissions from Natural Gas Boilers

Natural Gas (<100 million BTU/hr)

Enter maximum heat input (BTU rating)	**6,275,000**	BTU/hour
Enter total hours operated	**8,760**	hours/year
Total cubic feet of natural gas burned	**53,891,176**	cubic feet/year = (BTU/hr * hrs/yr) / 1020 BTU/cu ft

Facility name:
Facility AQ ID:

Emissions

Source: EPA AP-42 Chapter 1.4

Pollutant	b Boiler hourly natural gas usage[1] (cu ft/hr) (BTU/hr) / (1020 BTU/cu ft)	c Hours in a Year (hr/yr) 24 hrs/day * 365 days/yr	d Emission Factor (lbs/cu ft)	e Actual natural gas burned (cu ft/yr)	Potential Emissions (ton/yr) (b * c * d) / 2000	Insignificant activity threshold[2] (ton/yr)	Actual Emissions (tons/yr) (d * e / 2000
PM	6152	8760	0.0000076	53,891,176	**0.20**	**1**	**0.20**
PM10	6152	8760	0.0000076	53,891,176	**0.20**	**1**	**0.20**
VOC	6152	8760	0.0000055	53,891,176	**0.15**	**1**	**0.15**
SOx	6152	8760	0.0000006	53,891,176	**0.02**	**1**	**0.02**
NOx	6152	8760	0.0001	53,891,176	**2.69**	**1**	**2.69**
CO	6152	8760	0.000084	53,891,176	**2.26**	**2**	**2.26**
Lead	6152	8760	0.0000000005	53,891,176	**0.00**	**n/a**	**0.00**
GHG Total (CO_2e)	*see calculations below*				**3237**	**1000**	**3237**

Green House Gas (GHG) Emissions (CO_2e)

Sources: EPA AP-42 Chapter 1.4
74 FR 209 (30 Oct 2009), pages 56409-56410

Pollutant	a Global Warming Potential[3]	b Boiler hourly natural gas usage[1] (cu ft/hr) (BTU/hr) / (1020 BTU/cu ft)	c Hours in a Year (hr/yr) 24 hrs/day * 365 days/yr	d Emission Factor (lbs/cu ft)	e Annual actual natural gas burned cu ft/yr)	Potential Emissions (ton/yr) (a * b * c * d) / 2000	Insignificant Activity (ton/yr)	Actual Emissions (tons/yr) (a * d * e) / 2000
CO_2	1	6152	8760	0.120	53,891,176	**3233**	**n/a**	**3233**
CH_4	25	6152	8760	0.00000231	53,891,176	**2**	**n/a**	**1.6**
N_2O	298	6152	8760	0.000000231	53,891,176	**2**	**n/a**	**1.9**
					Green House Gas Total (CO_2e)	**3237**	**1000**	**3237**

[1]Heat value of natural gas is 1020 BTU/cubic foot according to EPA AP-42 Chapter 1.4
[2]Insignificant Activity from MN Rule 7007.1300, subp. 3, I. If potential emissions are below the insignificant activity threshold, they do not need to be included in the total.
[3]Global Warming Potential from 40 CFR Part 98, as revised in the Federal Register, Vol. 78, No. 230, p. 71909, November 29, 2013.
CO_2e = carbon dioxide equivalents

State of Tennessee
Department of Environment and Conservation
Division of Air Pollution Control
William R. Snodgrass Tennessee Tower
312 Rosa L. Parks Avenue, 15th Floor
Nashville, TN 37243
Telephone: (615) 532-0554

NON-TITLE V PERMIT APPLICATION
PROCESS OR FUEL BURNING SOURCE DESCRIPTION

Please type or print and submit in duplicate and attach to the Non-Title V Facility Identification Form (APC 100).

GENERAL IDENTIFICATION AND DESCRIPTION

1. Organization name THOMAS & BETTS CORPORATION	For APC use only	APC Company – Point no.
2. Emission source no. (As on Non-Title V Facility Identification Form) L-47356		APC Log/Permit no.

3. Description of process unit

BOILER #4-CLEAVER BROOKS CB PACKAGED BOILER-MANUFACTURE DATE 4/11/1969
NATURAL GAS ONLY
6.275 MMBtu/hr.

PROCESS SOURCE DESCRIPTION AND DATA

4. Type of source	(Check only one option below)
Process Source: Apply for a separate Permit for each source. (Check at right and complete lines 5, 6, and 11)	( )
Process Source with in process fuel: Products of combustion contact materials heated. Apply for a separate permit for each source. (Check at right and complete lines 5, 6, and 8 through 11)	( )
Non-Process fuel burning source: Products of combustion do not contact materials heated. Complete this form for each boiler or fuel burner and complete a Non-Title V Emission Point Description Form (APC 101) for each stack. (Check at right and complete lines 7 to 11)	(X)

5. Type of operation:	Normal batch time	Normal batches/day
Continuous (X) Batch ( )		

6. Process material inputs and In-process solid fuels	Diagram reference	Input rates (pounds/hour)	
		Design	Actual
A.			
B.			
C.			
D.			
E.			
F.			
G.			
Totals			

*** A simple process flow diagram must be attached.**

(Over)

BOILER, BURNER, GENERATOR, OR SIMILAR FUEL BURNING PROCESS DESCRIPTION

7. Boiler or burner data: (Complete lines 7 to 11 using a separate form for each boiler, burner, etc.)

Number	Stack number**	Type of firing***	Rated horsepower	Rated input capacity (10^6 BTU/Hr.)	Other rating (specify capacity and units)
CB-760-150	3	gas burner	150	6.275	

Serial no.	Date constructed	Date manufactured	Date of last modification (explain in comments below)
L-47876		7/18/1969	

** Source with a common stack will have the same stack number.
*** Cyclone, spreader (with or without reinjection), pulverized (wet or dry bottom, with or without reinjection), other stoker (specify type, hand fired, automatic, or other type (describe below in comments).

FUEL USED IN BOILER, BURNER, GENERATOR, OR SIMILAR FUEL BURNING SOURCE

8. Fuel data: (Complete for a process source with in process fuel or a non-process fuel burning source)

Primary fuel type (specify) NATURAL GAS

Standby fuel type(s) (specify) N/A

Fuels used	Annual usage	Hourly usage		% Sulfur	% Ash	BTU value of fuel		(For APC use only) SCC code
		Design	Average					
Natural gas:	10^6 Cu. Ft. 53.892	Cu. Ft. 6152	Cu. Ft.	/ / / / / / / /	/ / / / /	1,000		
#2 Fuel oil:	10^3 Gal.	Gal.	Gal.		/ / / / /			
#5 Fuel oil:	10^3 Gal.	Gal.	Gal.		/ / / / /			
#6 Fuel oil:	10^3 Gal.	Gal.	Gal.		/ / / / /			
Coal:	Tons	Lbs.	Lbs.					
Wood:	Tons	Lbs.	Lbs.	/ / / / / / / /	/ / / / /			
Liquid propane:	10^3 Gal.	Gal.	Gal.	/ / / / / / / /	/ / / / /	85,000		
Other (specify type & units):								

9. If Wood is used as a fuel, specify types and estimate percent by weight of bark

N/A

10. If Wood is used with other fuels, specify percent by weight of wood charged to the burner.

N/A

11. Comments

The Model CB760-150 boiler is a packaged firetube boiler of welded steel construction and consists of a pressure vessel, burner, burner controls, forced draft fan, damper, air pump, refractory, and appropriate boiler trim. The CB760 Series is Natural Gas Fired Only. The Model CB760-150 is the 150 HP model.

Guidance on Construction Permit Application Requirements

Construction Permit Application Checklist

☐ Complete items listed in Checklist. The application may be deemed incomplete if items are missing from this checklist.

☑ Apply for a Construction Permit. Application forms, with instructions, are available on APC's website at http://www.tn.gov/environment/article/permit-air-air-quality-construction-permit. The application may be deemed incomplete if applicable information is left blank.

☑ Non-Title V Source Construction Permit Application Fee - . The processing fee must be sent at the time the construction permit application is submitted. Refer to **Schedule A – Construction Permit Fees** at TAPCR 1200-03-26-.02(5)(g) or http://share.tn.gov/sos/rules/1200/1200-03/1200-03-26.20160605.pdf

☐ Certification/Responsible Person Signature. Applications shall be signed by the responsible person at the facility. Applications that are not signed or dated will not be processed.

☐ Process Flow Diagram. The process flow diagram shall clearly represent the process emission source covered by the application. All emission points within the source should be shown and identified. If a site has more than one process emission source, a flow diagram showing all of the process emission sources at the site should also be attached. The overall flow diagram needs to be included only once and does not need to be included with subsequent applications unless changes have been made.

☐ Supporting Calculations. Full details regarding the calculation method and emission factors used should be included with the emissions. For example:

i. If AP-42 is used, submit the version, chapter, table, equation, etc.
ii. Attach sample calculations and fully explain any assumptions, bottlenecks, etc.
iii. Submit any supporting information such as manufacturer's data, or material safety data sheets (MSDS).
iv. If the emissions are from a source test, provide details on the source test such as the date of the test, was the test approved by the Department, etc. If the source test was not approved by the Department, submit the test details and results.
v. If multiple fuels are used, use the worst case fuel to calculate emissions for each pollutant, and list the fuel in the calculation method details. Include the percent of sulfur in the fuel and BTU content of fuel, when appropriate.

☐ Federal Regulatory Review. This section is for sources that are subject to a Federal Regulation. Perform a full regulatory review of all applicable Federal Air Pollution Control Regulations and Standards. Cite all applicable requirements by the Subpart that apply for each emission unit. It is acceptable to cite the applicable section(s) of the Subpart.

☐ Control Device – Compliance. This section is for sources that will use a control device(s) for pollution control. Include all proposed monitoring, recordkeeping, and reporting requirements to demonstrate compliance. If the control device is covered by a federal regulation, it is acceptable to cite the applicable section(s) of the Subpart.

Guidance on Construction Permit Application Requirements

☐ Nonattainment Counties. All minor stationary sources, and minor source modifications at a minor stationary source, proposing to construct in nonattainment areas, shall address best available control technology (BACT) for the nonattainment pollutant.
See https://www3.epa.gov/airquality/greenbook/ancl.html for more information.

☐ Secretary of State Identification Number. Construction permits are issued to the name indicated on your registration filed with the Secretary of State. If your status is not current, please update your account before applying for a Construction permit.

OR

If you are not registered with the Tennessee Department of State, T.C.A. 48-11-301 and T.C.A. 48-249-101 provides the specific filing requirements that an entity must execute in order to achieve corporate status recognition in Tennessee. If you wish to complete the application process, please contact the Tennessee Department of State Business Service Division at 615-741-2286 or visit https://sos.tn.gov/business-services/business-entity-filings to determine the requirements with which you must comply to achieve corporate status recognition.

OR

If you decide not to pursue this option or the facility is not owned by a corporation, you must provide the Division with the name of the individual who owns or operates the facility along with the facility address on the application forms.

☐ Confidential Information. Request a confidential form for any information contained in your application that should be treated as confidential. Submit this form with the accompanying information. Because the Division cannot guarantee the confidentiality of electronic documents, please do not send any confidential information through email. Submit a redacted copy of the document(s) that can be made available to the public. The identity and magnitude of emissions from an air contaminant source cannot be deemed confidential per TCA 68-201-105(b)(2).
See http://www.tn.gov/assets/entities/environment/attachments/apc_Confidential-information-form-fillable.pdf for more information.

☐ Submit Construct Permit Application. Submit the construction permit application and application fee to the following address or email:

Tennessee Permit Program
Division of Air Pollution Control
William R. Snodgrass Tennessee Tower
312 Rosa L. Parks Avenue, 15TH Floor
Nashville, TN 37243

OR

Adobe Portable Document Format (PDF)
by email to: Air.Pollution.Control@tn.gov

Revision Number	Date	Brief Summary of Change
0	XXXXXXXXX XX, 2018	Initial Document

STATE OF TENNESSEE
DEPARTMENT OF ENVIRONMENT AND CONSERVATION
DIVISION OF AIR POLLUTION CONTROL
William R. Snodgrass Tennessee Tower, 15th Floor
312 Rosa L. Parks Avenue
Nashville, TN 37243

APC-PERM-G-02-Construction Permit Application Checklist – draft=122217

DRAFT Guidance on Construction Permit Application Requirements

DISCLAIMER: This document is guidance only and does not create legal rights or obligations. Agency decisions in any particular case will be made applying applicable laws and regulations to the specific facts.

EFFECTIVE DATE: XXXXXXXXXX XX, 2018

SIGNATURES:

_____
Division Director

_____
Drafter / Preparer

_____
Reviewer

PURPOSE

The purpose of this guidance is to provide list of minimum elements for determining a complete construction permit application.

$25.00 U.S.

CLEAVER-BROOKS MODEL CB, CB-LE PACKAGED BOILER

Operation, Service, and Parts Manual

125 through 200 HP
Fuel: Light Oil, Heavy Oil, Gas or Combination

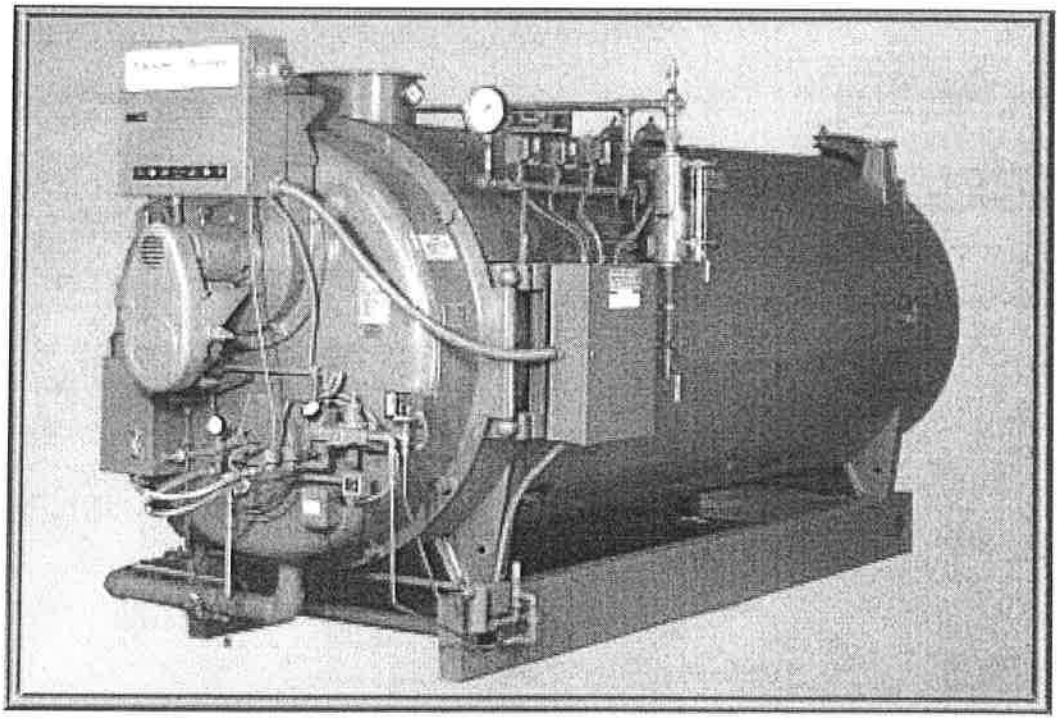

Cleaver-Brooks®
DIVISION OF AQUA-CHEM, INC.

Manual Part No. 750-184
8/98

SAFETY PRECAUTIONS AND ABBREVIATIONS

Safety Precautions

It is essential to read and understand the following safety precautions before attempting to operate the equipment. Failure to follow these precautions may result in damage to equipment, serious personal injury, or death. A complete understanding of this manual is required before attempting to start-up, operate or maintain the equipment. The equipment should be operated only by personnel who have a working knowledge and understanding of the equipment.

The following symbols are used throughout this manual:

⚠ WARNING

This symbol indicates a potentially hazardous situation which, if not avoided, could result in serious personal injury, or death.

⚠ CAUTION

This symbol indicates a potentially hazardous situation which, if not avoided, could result in damage to the equipment.

Note: This symbol indicates information that is vital to the operation of this equipment.

Abbreviations

Following is an explanation of the abbreviations, acronyms, and symbols used in this manual.

AC	Alternating Current
AR	Automatic Reset
ASME	American Society of Mechanical Engineers
ASTM	American Society of Testing and Materials
BHP	Boiler Horsepower
BTU	British Thermal Unit
°C	Degrees Celsius
CFH	Cubic Feet per Hour
Cu Ft	Cubic Feet
DC	Direct Current
°F	Degrees Fahrenheit
FM	Factory Mutual
FS	Flame Safeguard
ft	Feet
GPM	Gallons per Minute
Hd	Head
HT	Height
HTB	High Turndown Burner
HZ	Hertz
In H_2O	Inches of Water
IRI	Industrial Risk Insurance
Lb	Pound
LWCO	Low-Water Cut-Off
M	Million
MFD	Micro-Farad
MR	Manual Reset
NEC	National Electric Code
No.	Number
pH	Measure of the degree of acid or base of a solution
P/N	Part Number
PPM	Parts Per Million
PR	Program Relay
psi	Pounds Per Square Inch
SAE	Society of Automotive Engineers
scfh	Standard Cubic Feet per Hour
T	Temperature
TC	Temperature Control
TI	Temperature Gauge

MODEL CB, CB-LE PACKAGED BOILER

Operation, Service, and Parts Manual

125 through 200 HP
Fuel: Light Oil, Heavy Oil Gas or Combination

Cleaver-Brooks®

DIVISION OF AQUA-CHEM, INC.

© Cleaver-Brooks 1998

Please direct purchase orders for replacement manuals to your local Cleaver-Brooks authorized representative

NOTE: If you have a CB-HAWK™ Boiler Management Control System, refer to CB-HAWK Installation, Operating and Service Manual No. 750-133 during initial start up, and when referencing Chapters 5, 6, and 7 in this manual.

Manual Part No. 750-184

8/98

Printed in U.S.A.

⚠ WARNING

DO NOT OPERATE, SERVICE, OR REPAIR THIS EQUIPMENT UNLESS YOU FULLY UNDERSTAND ALL APPLICABLE SECTIONS OF THIS MANUAL.

DO NOT ALLOW OTHERS TO OPERATE, SERVICE, OR REPAIR THIS EQUIPMENT UNLESS THEY FULLY UNDERSTAND ALL APPLICABLE SECTIONS OF THIS MANUAL.

FAILURE TO FOLLOW ALL APPLICABLE WARNINGS AND INSTRUCTIONS MAY RESULT IN SEVERE PERSONAL INJURY OR DEATH.

TO: Owners, Operators and/or Maintenance Personnel

This operating manual presents information that will help to properly operate and care for the equipment. Study its contents carefully. The unit will provide good service and continued operation if proper operating and maintenance instructions are followed. No attempt should be made to operate the unit until the principles of operation and all of the components are thoroughly understood. Failure to follow all applicable instructions and warnings may result in severe personal injury or death.

It is the responsibility of the owner to train and advise not only his or her personnel, but the contractors' personnel who are servicing, repairing or operating the equipment, in all safety aspects.

Cleaver-Brooks equipment is designed and engineered to give long life and excellent service on the job. The electrical and mechanical devices supplied as part of the unit were chosen because of their known ability to perform; however, proper operating techniques and maintenance procedures must be followed at all times. Although these components afford a high degree of protection and safety, operation of equipment is not to be considered free from all dangers and hazards inherent in handling and firing of fuel.

Any "automatic" features included in the design do not relieve the attendant of any responsibility. Such features merely free him of certain repetitive chores and give him more time to devote to the proper upkeep of equipment.

It is solely the operator's responsibility to properly operate and maintain the equipment. No amount of written instructions can replace intelligent thinking and reasoning and this manual is not intended to relieve the operating personnel of the responsibility for proper operation. On the other hand, a thorough understanding of this manual is required before attempting to operate, maintain, service, or repair this equipment.

Because of state, local, or other applicable codes, there are a variety of electric controls and safety devices which vary considerably from one boiler to another. This manual contains information designed to show how a basic burner operates.

Operating controls will normally function for long periods of time and we have found that some operators become lax in their daily or monthly testing, assuming that normal operation will continue indefinitely. Malfunctions of controls lead to uneconomical operation and damage and, in most cases, these conditions can be traced directly to carelessness and deficiencies in testing and maintenance.

It is recommended that a boiler room log or record be maintained. Recording of daily, weekly, monthly and yearly maintenance activities and recording of any unusual operation will serve as a valuable guide to any necessary investigation.

Most instances of major boiler damage are the result of operation with low water. We cannot emphasize too strongly the need for the operator to periodically check his low water controls and to follow good maintenance and testing practices. Cross-connecting piping to low water devices must be internally inspected periodically to guard against any stoppages which could obstruct the free flow of water to the low water devices. Float bowls of these controls must be inspected frequently to check for the presence of foreign substances that would impede float ball movement.

The waterside condition of the pressure vessel is of extreme importance. Waterside surfaces should be inspected frequently to check for the presence of any mud, sludge, scale or corrosion.

The services of a qualified water treating company or a water consultant to recommend the proper boiler water treating practices are essential.

The operation of this equipment by the owner and his or her operating personnel must comply with all requirements or regulations of his insurance company and/or other authority having jurisdiction. In the event of any conflict or inconsistency between such requirements and the warnings or instructions contained herein, please contact Cleaver-Brooks before proceeding.

TABLE OF CONTENTS

Chapter 1

Basics of Firetube Operation

A. General 1-1
B. The Boiler 1-2
C. Construction 1-3
D. Steam Controls (All Fuels) 1-5
E. Hot Water Controls (All Fuels) 1-7
F. Induced Flue Gas Recirculation Components (CB-LE) 1-9

Chapter 2

Burner Operation and Control

A. The Burner 2-1
B. Control And Component Function 2-4
C. Components Common To All Boilers 2-4
D. Controls For Gas Firing 2-5
E. Controls Common To Oil-Fired Boiler
(Including Combination) 2-8
F. Additional Controls For Heavy Oil 2-11
G. Controls For Combination Burners Only 2-12
H. Combustion Air 2-12
I. Automatic Ignition 2-13
J. Atomizing Air 2-13
K. Oil Fuel Flow - Light Oil 2-13
L. Oil Fuel Flow - Heavy Oil 2-16
M. Gas Fuel Flow 2-16
N. Modulating Firing 2-16

Chapter 3

Waterside Care And Requirements

A. General 3-1
B. Water Requirements 3-1
C. Water Treatment 3-5
D. Cleaning 3-5
E. Boil-out Of A New Unit 3-6
F. Washing Out 3-7
G. Blowdown Steam Boiler 3-7
H. Periodic Inspection 3-9
I. Preparation For Extended Lay-up 3-9

TABLE OF CONTENTS(continued)

Chapter 4

Sequence Of Operation

A. General 4-1
B. Circuit And Interlock Controls 4-1
C. Sequence Of Operation - Oil Or Gas 4-2
D. Flame Loss Sequence 4-3

Chapter 5

Starting And Operating Instructions

A. General Preparation for Start-up - All Fuels 5-1
B. Control Settings-Steam and Hot Water 5-2
C. Gas Pilot 5-3
D. Atomizing Air 5-3
E. Firing Preparations for No. 2 Oil (Series 100-200) 5-4
F. Firing Preparations for No. 6 Oil (Series 400-600) 5-6
G. Firing Preparations for Gas (Series 200-400-700) 5-7
H. Induced Flue Gas Recirculation Set Up 5-8
I. Start-up, Operating and Shutdown - All Fuels 5-10
J. Control Operational Tests and Checks 5-11

Chapter 6

Adjustment Procedures

A. General 6-1
B. Linkage - Modulating Motor & Air Damper 6-2
C. Modulating Motor 6-3
D. Modulating Motor Switches Low Fire and High Fire 6-3
E. Burner Operating Controls General 6-4
F. Modulating Pressure Controls (Steam) 6-6
G. Operating Limit Pressure Control (Steam) 6-6
H. High Limit Pressure Control - (Steam) 6-6
I. Modulating Temperature Control - (Hot Water) 6-6
J. Operating Limit Temperature Control - (Hot Water) 6-7
K. High Limit Temperature Control - (Hot Water) 6-7
L. Low-Water Cutoff Devices 6-7
M. Combustion Air Proving Switch 6-7
N. Atomizing Air Proving Switch 6-7
O. Gas Pilot Flame Adjustment 6-8
P. Gas Pressure and Flow Information 6-9
Q. Gas Fuel Combustion Adjustment 6-11
R. Low-Gas Pressure Switch 6-13
S. High-Gas Pressure Switch 6-14
T. Fuel Oil Pressure and Temperature - General 6-14
U. Fuel Oil Combustion Adjustment 6-17

Chapter 6 (continued)

Adjustment Procedures

V. Burner Drawer Adjustments 6-18
W. Oil Drawer Switch 6-18
X. Low-Oil-Temperature Switch 6-18
Y. High-Oil-Temperature Switch 6-18
Z. Low-Oil-Pressure Switch 6-19
AA. Electric Oil Heater Thermostat 6-19
BB. Steam Oil Heater Thermostat 6-19
CC. Hot Water Oil Heater Thermostat 6-19
DD. Steam Heater Pressure Regulator 6-19

Chapter 7

Trouble Shooting 7-1

Chapter 8

Inspection And Maintenance

A. General 8-1
B. Fireside Cleaning 8-2
C. Water Level Controls and Waterside 8-2
D. Water Gauge Glass 8-3
E. Electrical Controls 8-3
F. Flame Safety Control 8-4
G. Oil Burner Maintenance 8-5
H. Gas Burner Maintenance 8-7
I. Motorized Gas Valve 8-7
J. Solenoid Valves 8-7
K. Air Control Damper, Linkage and Cam Spring 8-7
L. Forced Draft Fan 8-8
M. CB-LE Fan/Motor Cassette Removal 8-9
N. CB-LE Inspection and Adjustment 8-10
O. CB-LE Airbox Gasket Installation 8-12
P. CB-LE Fan/Motor Cassette Installation 8-12
Q. Safety Valves 8-19
R. Fuel Oil Valves 8-19
S. Air Pump and Components 8-20
T. Head Inspection and Maintenance 8-23
U. Refractory 8-25
V. Sealing and Closing Inner Door and Front Head 8-27
W. Lubrication 8-31
X. Oil Heaters—Electric, Steam, Hot Water 8-32
Y. Combustion 8-32
Z. Air Pump Belt 8-32

Chapter 9
Customer Service And Parts

Front Door, Inner Door 3-5
Rear Head 6
Dry Oven & Liner Tile 7, 8
Impellers 9,10
Jackshafts, Mod Motor, Air Damper Linkage. 11-15
Burner Drawer 16, 17
Burner Housing. 18, 19
Flame Control 20, 21
Entrance Box & Fuses 22, 23
Front Head Electrical 24, 25
Electric Oil Heater 26, 27
Oil Emission Steam Electric Heater 28-30
Air Compressor /Air Line Piping 31-34
Light Oil / Air Piping Front Head. 35, 36
Gas Trains 37, 38
Pressure Controls 39
Temperature Controls 40, 41
Water Column 42, 43

Notes

CHAPTER 1

Basics of Firetube Operation

A. General 1-1
B. The Boiler 1-2
C. Construction 1-3
D. Steam Controls (All Fuels) 1-5
E. Hot Water Controls (All Fuels) 1-7
F. Induced Flue Gas Recirculation Components 1-9

A. GENERAL

Firetube boilers are available for low or high pressure steam, or for hot water applications. Firetube boilers are typically used for applications ranging from 15 to 800 horsepower. A firetube boiler is a cylindrical vessel, with horizontal tubes passing through and connected to the front and rear tube sheets. The vessel contains the water and absorbs the energy generated from the flame. The front door and rear door provide the seal to contain the hot combustion gasses. Baffles designed into the doors serve to redirect the combustion gasses through the various firetube passages. The flame originates in the furnace. As the combustion gasses travel down the furnace and through the various firetube channels, heat from the flame and combustion gasses is transferred to the water. Transferred energy develops into the required steam or hot water. The primary purpose of the boiler is to supply energy to the facility's operations - for heat, manufacturing process, laundry, kitchen, etc. The nature of the facility's operation will dictate whether a steam or hot water boiler should be used.

Note: If your boiler is equipped with a CB-HAWK™ boiler management control system, refer to CB-HAWK Installation, Operating and Servicing Manual No. 750-133 for information regarding controls discussed in Chapter 1.

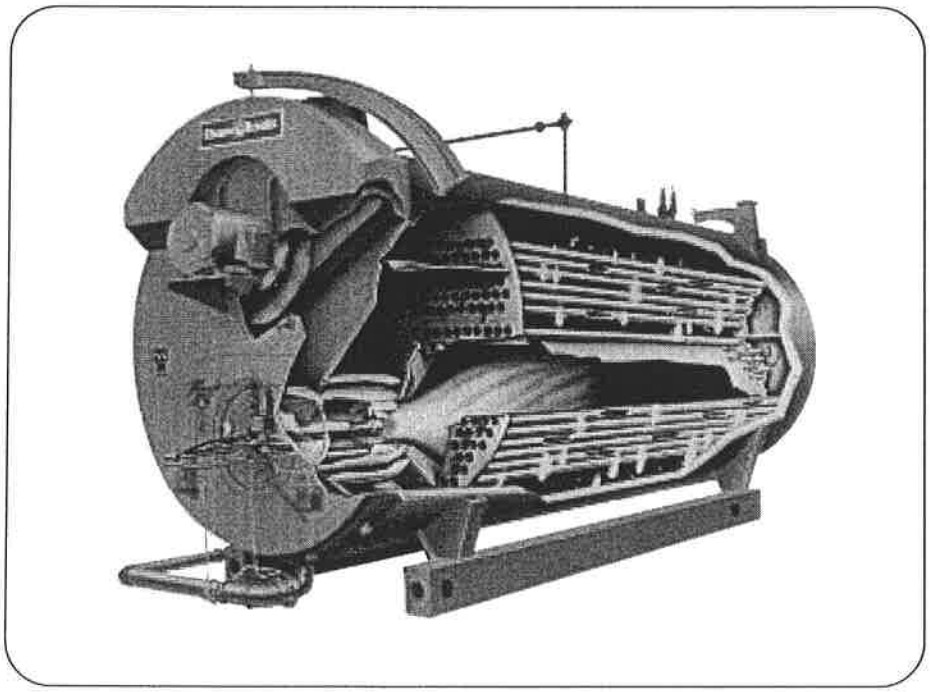

Figure: 1-1 Firetube Cut Away(Typical)

The general information in this manual applies directly to Cleaver-Brooks Model CB Boilers in sizes ranging from 125 through 200 boiler horsepower for the following fuels:

Series 100 Light Oil (No. 2)
Series 200 Light Oil (No. 2) Or Gas
Series 400 Heavy Oil (No. 6) Or Gas
Series 600 Heavy Oil (No. 6) Only
Series 700 Gas Only

Note: Although the Series 400 or 600 burner is designed and designated to burn No. 6 oil, the burner will handle grades 4 and 5 equally well, with some possible adjustments. While the manual contains pertinent information on No. 6 fuel oil, all references to No. 6 fuel should be considered applicable to all grades of heavy oil.

Rated Capacity	125 through 200hp
Operating Pressure	Steam 15-250 psig, or higher if specified Hot Water 30-250 psig or higher if specified
Fuel	Oil or Gas or Combination
Ignition	Automatic
Firing	Full Modulation Through Operating Ranges
Burner (Oil)	(Low Pressure) Air Atomizing
Burner (Gas)	Non-premix – Orificed Type
Air Damper	Rotary Type (Electrically Modulated)
Steam Trim	ASME Code
Water Trim	ASME Code

The LE Option, available on Cleaver-Brooks Firetube Boilers, reduces Nitrogen Oxide (NOx) emissions, a major precursor to ozone pollution (smog). Carbon Monoxide (CO) emissions also tend to be lower, due to increased turbulence caused by the addition of the flue gases into the combustion air stream, thereby improving combustion.

Note: For information on IFGR when firing heavy oil, review the Operation and Maintenance manual for Heavy Oil Isolation 750-171

The LE Option is used on Cleaver-Brooks Model CB Firetube boilers firing either natural gas and/or light oil, and is compatible with both hot water and steam systems.

The IFGR system mixes a portion of the relatively cool flue gas from the exit of the fourth-pass tubes with the incoming combustion air to reduce the furnace flame temperature, thereby reducing NOx emissions. In this approach, the combustion air fan handles both the combustion air and the recirculated flue gases. Accordingly, this method is called Induced Flue Gas Recirculation (IFGR), because the flue gas is "induced" into the fan inlet.

The LE Option, with its various levels of IFGR systems, can affect the selection of the combustion air fan, motor, burner, and other components. Several different system configurations are available, depending on the requirements for NOx emissions and the fuels used. All systems use similar primary components, but may have different linkage controls, IFGR damper, fan, and motor sizes.

Always order genuine Cleaver-Brooks parts from your local Cleaver-Brooks authorized representative.

The boiler and related equipment installation are to be in compliance with the standards of the National Board of Fire Underwriters. Installation should also conform to state and local codes governing such equipment. Prior to installation, the proper authorities having jurisdiction are to be consulted, permits obtained, etc. All boilers in the above series comply, when equipped with optional equipment, to Industrial Risk Insurers (IRI), Factory Mutual (FM), or other insuring underwriters requirements.

B. THE BOILER

The Model CB boiler is a packaged firetube boiler of welded steel construction and consists of a pressure vessel, burner, burner controls, forced draft fan, damper, air pump, refractory, and appropriate boiler trim.

The horsepower rating of the boiler is indicated by the numbers following the fuel series. Thus, CB700-200 indicates a gas-fired 200 hp boiler.

The firetube construction provides some characteristics that differentiate it from other boiler types. Because of its vessel size, the firetube contains a large amount of water, allowing it to respond to load changes with minimum variation in steam pressure.

Firetube boilers are rated in boiler horsepower (BHP), which should not be confused with other horsepower measurements.

Hot water is commonly used in heating applications with the boiler supplying water to the system at 180 °F to 220 °F. The operating pressure for hot water heating systems usually is 30 psig to 125 psig.

Steam boilers are designed for low pressure or high pressure applications. Low pressure boilers are limited to 15 psig design, and are typically used for heating applications. High pressure boilers are typically used for process loads and can have a design pressure of 75 to 350 psig.

Steam and hot water boilers are defined according to design pressure and operating pressure. Design pressure is the maximum pressure used in the design of the boiler for the purpose of calculating the minimum permissible thickness or physical characteristics of the pressure vessel parts of the boiler. Typically, the safety valves are set at or below design pressure. Operating pressure is the pressure of the boiler at which it normally operates. The operating pressure usually is maintained at a suitable level below the setting of the pressure relieving valve(s) to prevent their frequent opening during normal operation.

The type of service that your boiler is required to provide has an important bearing on the amount of waterside care it will require.

⚠ CAUTION

Waterside care is of prime importance. For specific information or assistance with your water treatment requirements, contact your Cleaver-Brooks service and parts representative. Failure to follow these instructions could result in equipment damage

Feedwater equipment should be checked and ready for use. Be sure that all valves, piping, boiler feed pumps, and receivers are installed in accordance with prevailing codes and practices.

Water requirements for both steam and hot water boilers are essential to boiler life and length of service. Constant attention to water requirements will pay dividends in the form of longer life, less down-time, and prevention of costly repairs. Care taken in placing the pressure vessel into initial service is vital. The waterside of new boilers and new or remodeled steam or hot water systems may contain oil, grease or other foreign matter. A method of boiling out the vessel to remove accumulations is described in Chapter 3.

The operator should be familiar with Chapter 3 before attempting to place the unit into operation.

C. CONSTRUCTION

Steam boilers designed for 15 psig and hot water boilers designed for 250°F at 125 psi or less are constructed in accordance with Section IV, Power Boilers, of ASME Code.

Steam boilers designed for operating pressures exceeding 15 psig are constructed in accordance with Section 1, Power Boilers, of the ASME Code. Hot water boilers designed for operating temperatures above 250°F or 125 psi are likewise built to ASME Code.

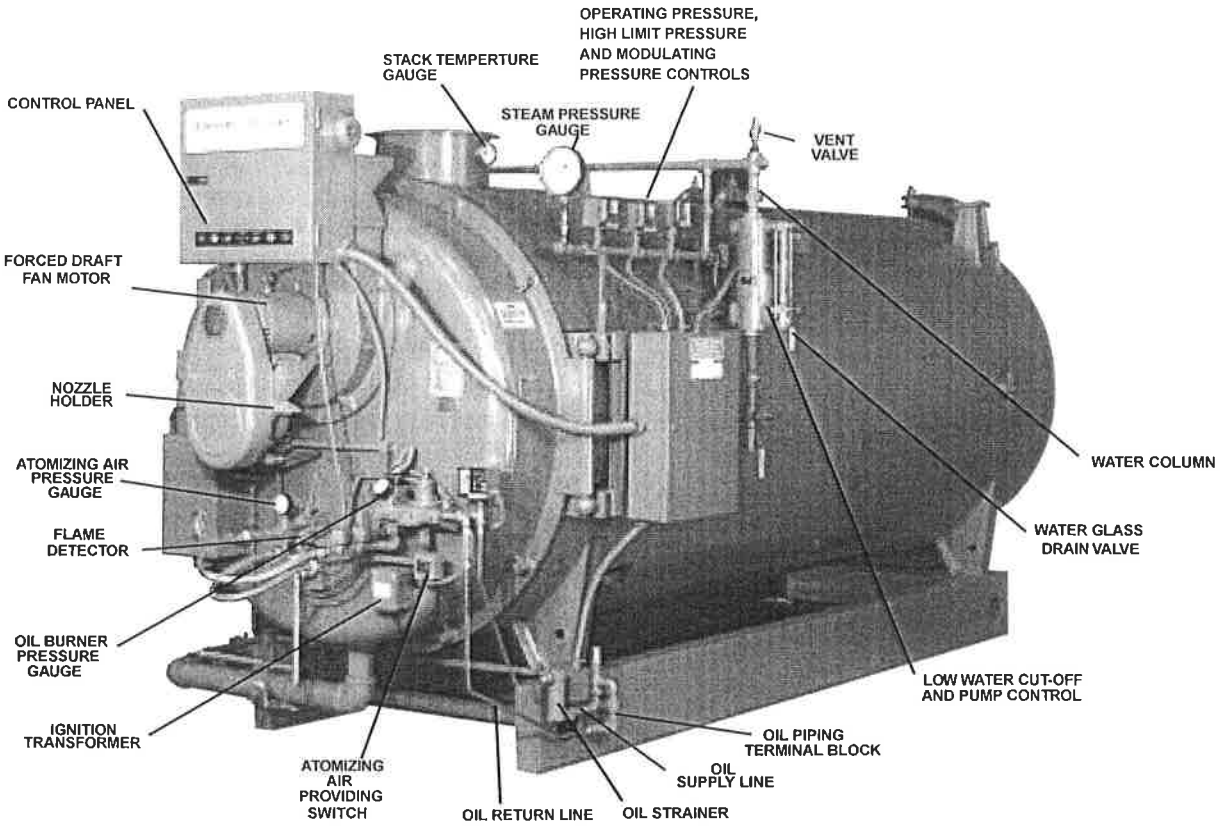

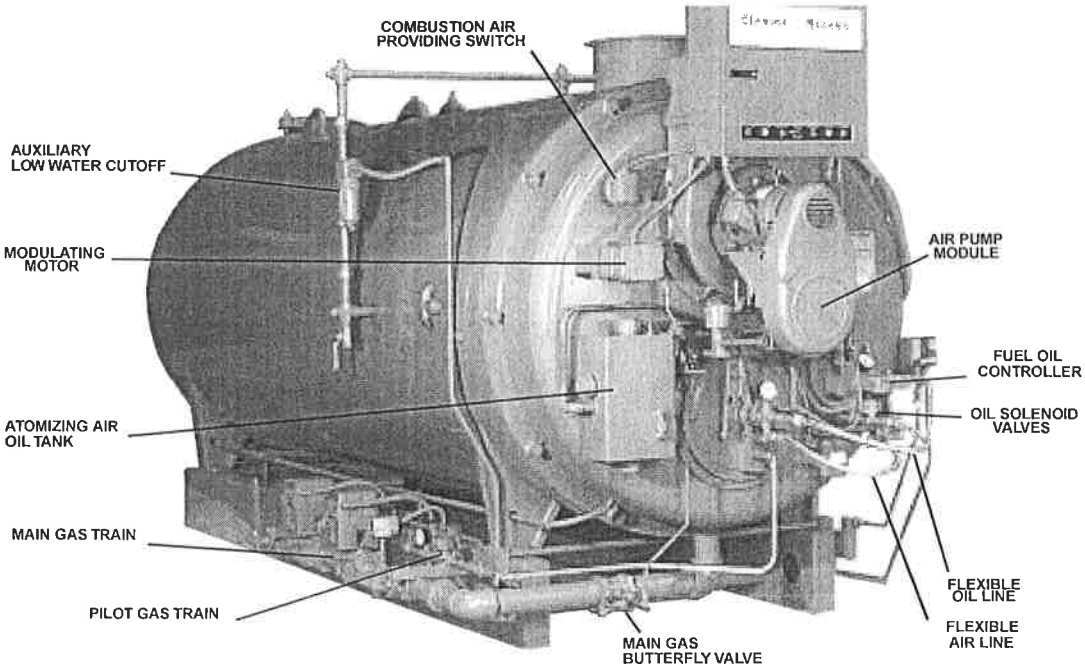

Figure: 1-2 Typical Steam Boiler - Light Oil or Gas Fired (CB)

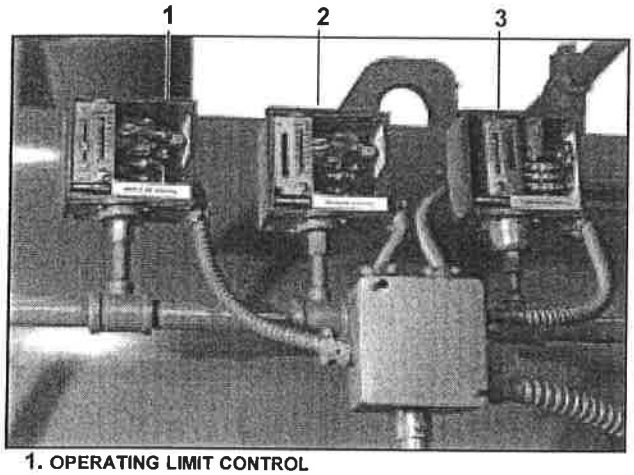

1. OPERATING LIMIT CONTROL
2. HIGH LIMIT CONTROL
3. MODULATING CONTROL

Figure: 1-3 Steam Controls

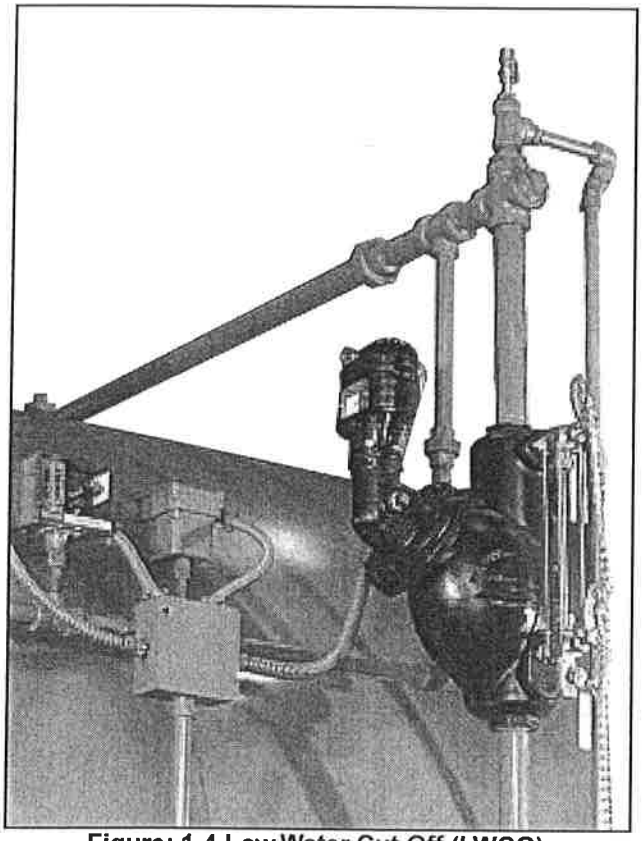

Figure: 1-4 Low Water Cut Off (LWCO)

D. STEAM CONTROLS (ALL FUELS)

1. Operating Limit Pressure Control (Figure 1-3): Breaks a circuit to stop burner operation on a rise of boiler pressure at a selected setting. It is adjusted to stop or start the burner at a preselected pressure setting.
2. High Limit Pressure Control (Figure 1-3): Breaks a circuit to stop burner operation on a rise of pressure above a selected setting. It is adjusted to stop the burner at a preselected pressure above the operating limit control setting. The high limit pressure control is normally equipped with a manual reset.
3. Modulating Pressure Control (Figure 1-3): Senses changing boiler pressures and transmits the information to the modulating motor to change the burner firing rate when the manual-automatic switch is set on "automatic."
4. Low-Water Cutoff and Pump Control (Figure 1-4): Float-operated control responds to the water level in the boiler. It performs two distinct functions:

•Stops firing of the burner if water level lowers below the safe operating point. Energizes the low-water light in the control panel; also causes low-water alarm bell (optional equipment) to ring. Code requirements of some models require a manual reset type of low-water cutoff.

•Starts and stops the feedwater pump (if used) to maintain water at the proper operating level (Figure 1-5).

⚠ CAUTION

Determine that the main and auxiliary low water cutoffs and pump control are level after installation and throughout the equipment's operating life. Failure to follow these instructions could result in equipment damage.

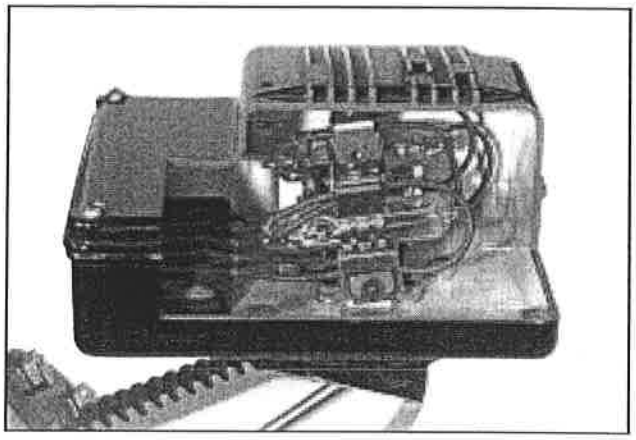

Figure: 1-5 Low Water Cut Off Pump Control (Cutaway)

5. Water Column Assembly (Figure 1-6): Houses the low-water cutoff and pump control and includes the water gauge glass, gauge glass shutoff cocks.
6. Water Column Drain Valve (Figure 1-6): Provided so that the water column and its piping can be flushed regularly to assist in maintaining cross-connecting piping and in keeping the float bowl clean and free of sediment. A similar drain valve is furnished with auxiliary low-water cutoff for the same purpose.
7. Water Gauge Glass Drain Valve (Figure 1-7): Provided to flush the gauge glass.
8. Vent Valve (Figure 1-7): Allows the boiler to be vented during filling, and facilitates routine boiler inspection as required by ASME Code.
9. Stack Temperature Gauge (Figure 1-7): Indicates flue gas outlet temperature.

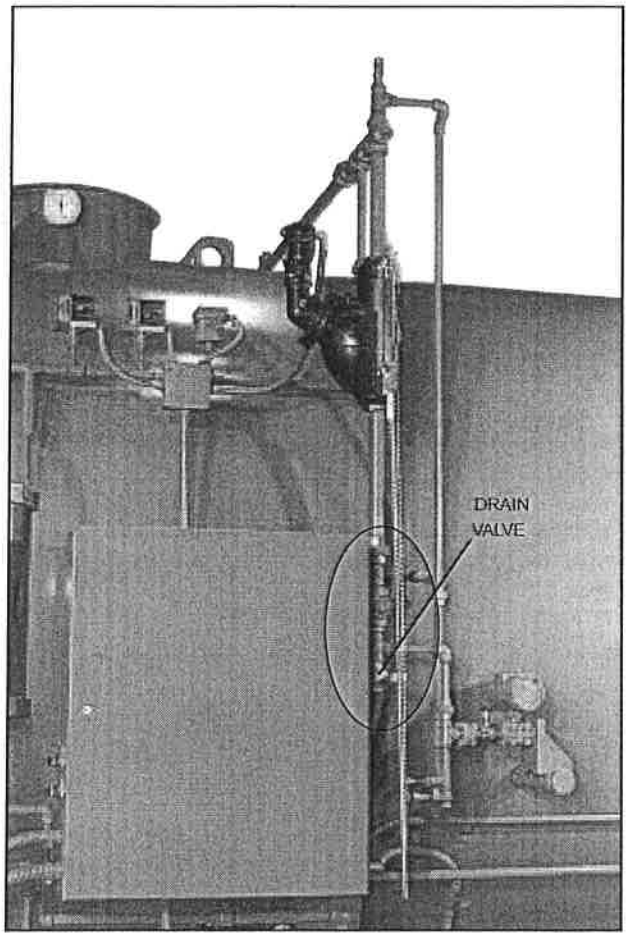

Figure: 1-6 Water Column Assembly

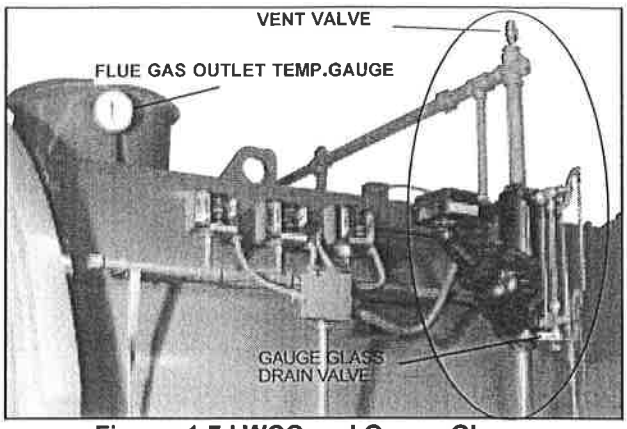

Figure: 1-7 LWCO and Gauge Glass

10. Auxiliary Low-water Cutoff (Figure 1-8): Breaks the circuit to stop burner operation in the event boiler water drops below the master low-water cutoff point. Manual reset type requires manual resetting in order to start the burner after a low-water condition.

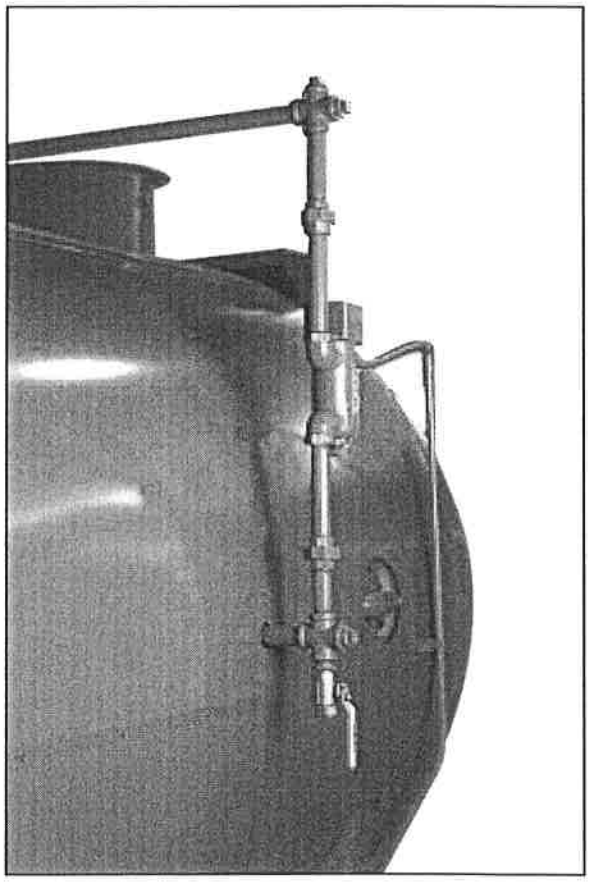

Figure: 1-8 Auxiliary Low Water Cut Off

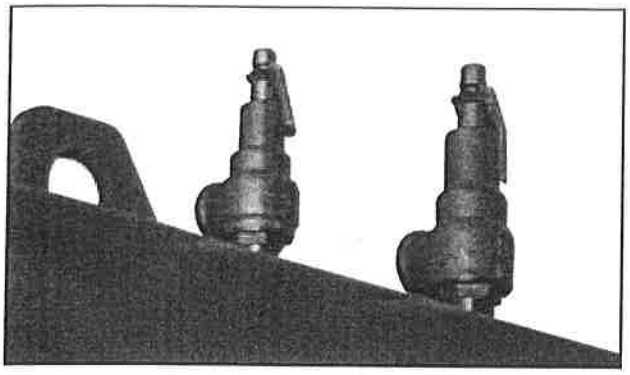

Figure: 1-9 Safety Valves

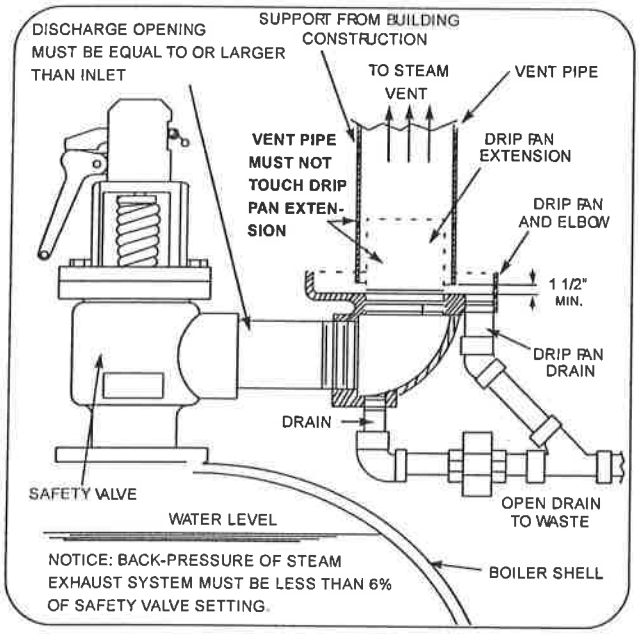

Figure: 1-10 Recommended Piping For Steam Relief Valve (Not furnished by Cleaver-Brooks)

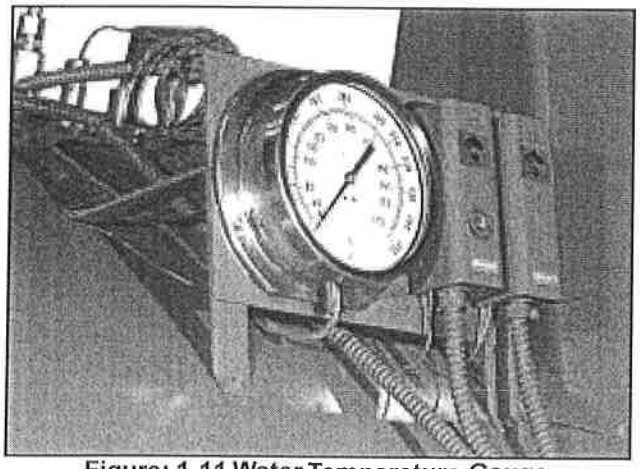

Figure: 1-11 Water Temperature Gauge

11. Safety Valve(s) (Figure 1-9): Prevent buildup over the design pressure of the pressure vessel. The size, rating and number of valves on a boiler is determined by the ASME Boiler Code. The safety valves and the discharge piping are to be installed to conform to the ASME code requirements. The installation of a valve is of primary importance to its service life. A valve must be mounted in a vertical position so that discharge piping and code-required drains can be properly piped to prevent buildup of back pressure and accumulation of foreign material around the valve seat area. Apply only a moderate amount of pipe compound to male threads and avoid overtightening, which can distort the seats. Use only flat-jawed wrenches on the flats provided. When installing a flange-connected valve, use a new gasket and draw the mounting bolts down evenly. Do not install or remove side outlet valves by using a pipe or wrench in the outlet.

⚠WARNING

Only properly certified personnel such as the safety valve manufacturer's certified representative can adjust or repair the boiler safety valves. Failure to follow these instructions could result in serious personal injury or death

E. HOT WATER CONTROLS (ALL FUELS)

1. Water Temperature Gauge (Figure 1-11): Indicates the boiler internal water temperature.
2. Operating Limit Temperature Control (Figure 1-12): Breaks a circuit to stop burner operation on a rise of boiler temperature at a selected setting. It is adjusted to stop or start the burner at a preselected operating temperature.
3. High Limit Temperature Control (Figure 1-12): Breaks a circuit to stop burner operation on a rise of temperature at a selected setting. It is adjusted to stop burner at a preselected temperature above the operating control setting. The high limit temperature control normally is equipped with a manual reset.
4. Modulating Temperature Control (Figure 1-12): Senses changing boiler water temperature and transmits the information to the modulating motor to change the

burner firing rate when the manual-automatic switch is set on "automatic."

5. Low-Water Cutoff (Figure 1-13): Breaks the circuit to stop burner operation if the water level in the boiler drops below safe operating point, activating low-water light and optional alarm bell if burner is so equipped.
6. Auxiliary Low-Water Cutoff (Figure 1-14) (Optional): Breaks the circuit to stop burner operation if the water level in the boiler drops below the master low-water cutoff point.
7. Safety Valve(s) (Figure 1-9): Relieves the boiler of pressure higher than the design pressure or a lower pressure, if designated. Relief valves and their discharge piping are to be installed to conform to ASME Code requirements.

⚠WARNING

Only properly certified personnel such as the relief valve manufacturer's certified representative can adjust or repair the boiler relief valves. Failure to follow these instructions could result in serious personal injury or death.

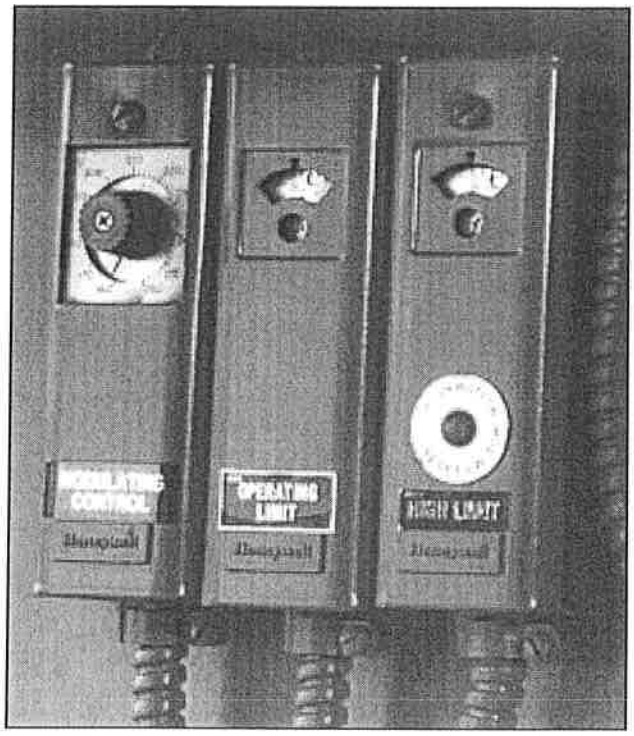

Figure: 1-12 Hot Water Controls

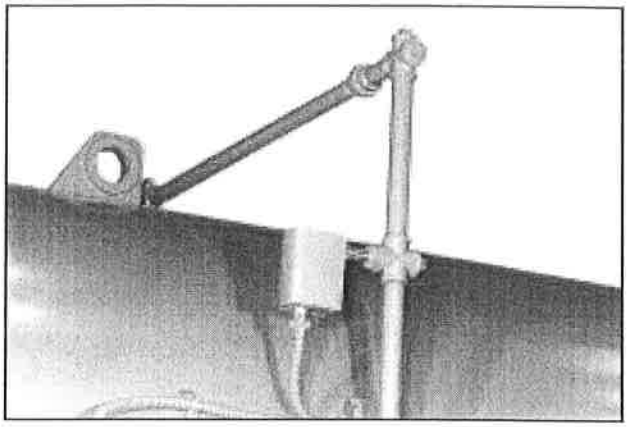

Figure: 1-13 Low Water Cutoff (LWCO Hot Water)

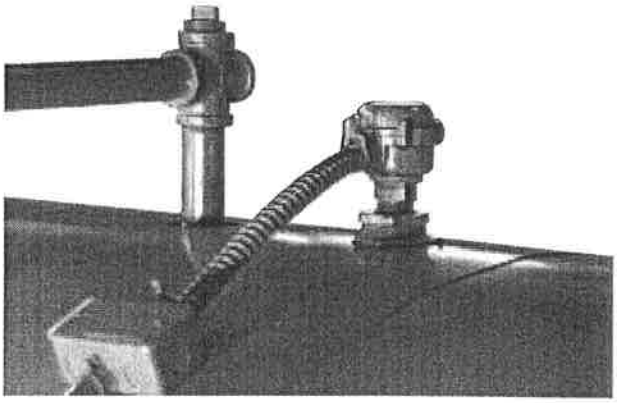

Figure: 1-14 Auxiliary Low-Water Cutoff

F. IFGR COMPONENTS (CB-LE)

1. Flue Gas Transfer Port, IFGR Damper, and Flange Collar (Figure 1-15). The flue gas transfer port is a tube that allows the flue gases to travel from the exit of the fourth-pass tubes to the entrance of the combustion air fan.

   The IFGR damper controls the volume of flue gas induced into the combustion air stream. The damper is located in the flue gas transfer port and is positioned by the control linkage.

2. IFGR Damper Linkage (Figure 1-16). The IFGR damper is positioned by the control linkage. The linkage could consist of a single arm, or it could consist of several arms driven from the jackshaft to provide modulating control (see Figure 1-16).

3. Over-Travel Mechanism (Figures 1-15 and 1-16). The over-travel mechanism has two functions. It allows the linkage to pass through the front door, and it allows jackshaft rotation to exceed (over travel) IFGR linkage movement. A set of springs allows the linkage to stay in a fixed position while the jackshaft rotates.

4. Fuel Change-Over Linkage (Figure 1-16). When a boiler is equipped to fire either gas or oil (dual-fuel boilers), and the required NOx levels are below 60 ppm on natural gas, a dual-linkage arrangement is used to provide the different recirculation rates required for each fuel. Two jackshaft drive arms are provided, one for oil and one for gas. The linkage is manually connected to the appropriate arm, based on the fuel being used.

   On dual-fuel boilers with two jackshaft drive arms, as defined above, a proximity switch is used to prove that the correct linkage connection is made. (Refer to the wiring diagram provided with the boiler.)

5. Fan/Motor Cassette. The fan and motor assemblies are designed as a cassette so that they can be removed from the front of the boiler, without opening the front door. The front door davit arm can be used to remove the assembly.

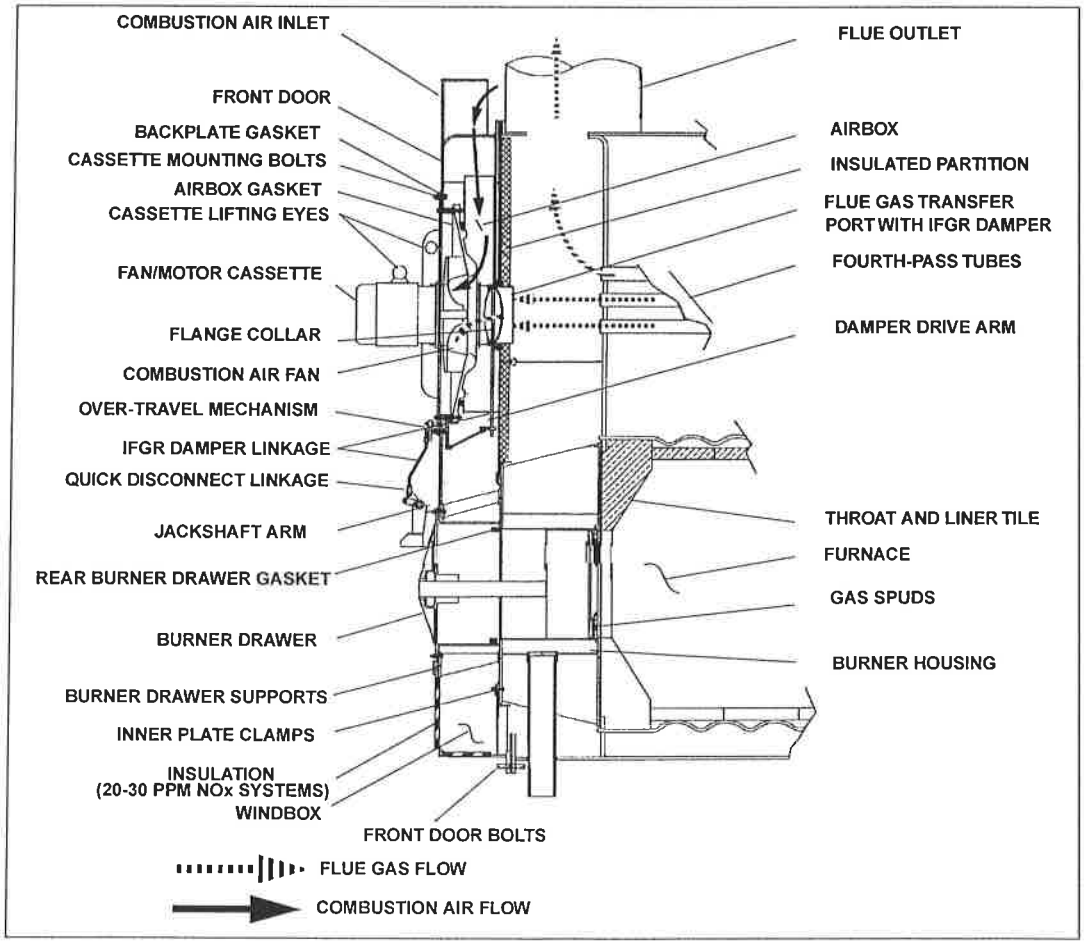

Figure: 1-15 Induced Flue Gas Recirculation System, General Arrangement

6. Burner Drawer (Figure 1-15). The gas spudding pattern for the IFGR system may be different than that of a non-IFGR CB Burner of the same horsepower (HP) model designation.
7. Combustion Air Inlet (Figure 1-15). The combustion air inlets are located at the top of the front door. Air enters from the rear of the air inlet shrouds, which reduces the sound level and captures heat from the boiler and stack flue outlet.
8. Front Door Insulation (Figure 1-15). If NO_x emissions are below 60 PPM, the front door is insulated inside to control temperature build up. The insulation is held in place with wire mesh.

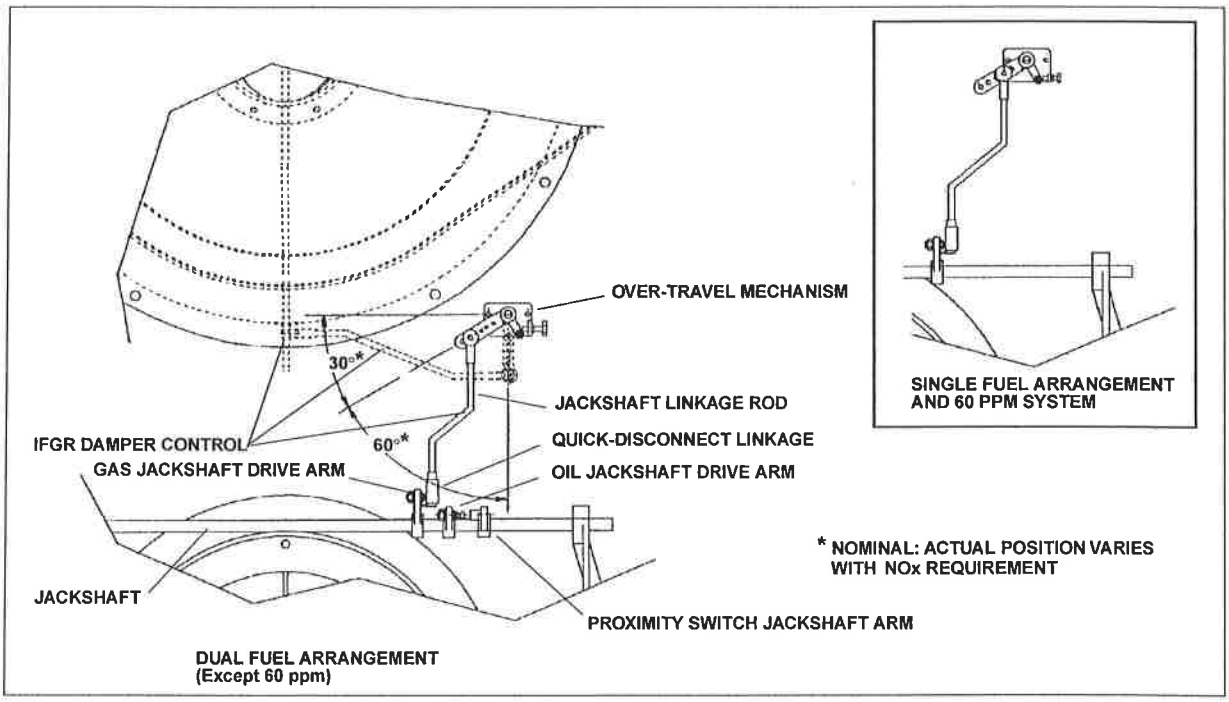

Figure: 1-16 IFGR Damper Linkage

CHAPTER 2

Burner Operation and Control

A. The Burner 2-1
B. Control And Component Function 2-4
C. Components Common To All Boilers 2-4
D. Controls For Gas Firing 2-5
E. Controls Common To Oil-fired Boiler (Including Combination) 2-8
F. Additional Controls For Heavy Oil 2-11
G. Controls For Combination Burners Only 2-12
H. Combustion Air 2-12
I. Automatic Ignition 2-13
J. Atomizing Air 2-13
K. Oil Fuel Flow - Light Oil 2-13
L. Oil Fuel Flow - Heavy Oil 2-16
M. Gas Fuel Flow 2-16
N. Modulating Firing 2-16

A. THE BURNER

The oil burner is of the low pressure, air atomizing (nozzle) type. The gas burner is of the non-premix orifice type. The burners are ignited by spark ignited gas pilot. The pilot is of the interrupted type and is extinguished after main flame is established.

Note: A Series 100 boiler is usually equipped with a light oil pilot, although a gas pilot is also available.

Burners equipped to burn oil and gas (combination burners) include equipment for each distinct fuel. Since the burner uses only one type of fuel at a time, a gas/oil selector switch is incorporated.

Regardless of which fuel is used, the burner operates with full modulation (within its rated operating range). The burner returns to minimum firing position for ignition. High-pressure boilers (above 15 psi) can be wired for both low-pressure and high-pressure modulation, which enables the boiler to operate at lower pressure during off-load hours, but at a somewhat reduced steam output, dependent upon lower steam pressure and steam nozzle sizing.

The flame safeguard and program relay include a flame detector to supervise both oil and gas flames, and to shut the burner down in the event of loss of flame. The programming portion of the control provides a pre-purging period, proving of the pilot and main flame, and a period of continued blower operation to postpurge the boiler of all unburned fuel vapor. Other safety controls shut down the burner under low-water conditions, excess steam pressure, or water temperature.

Safety interlock controls include combustion and atomizing air proving switches and, depending upon the fuel and insurance carrier requirements, controls that prove the presence of adequate fuel pressure, plus temperature proving controls when heated fuel oil is used.

The sequence of burner operation from startup through shutdown is governed by the program relay in conjunction with the operating, limit and interlock devices. The devices are wired into the circuitry to provide safe operation and protect against incorrect operating techniques.

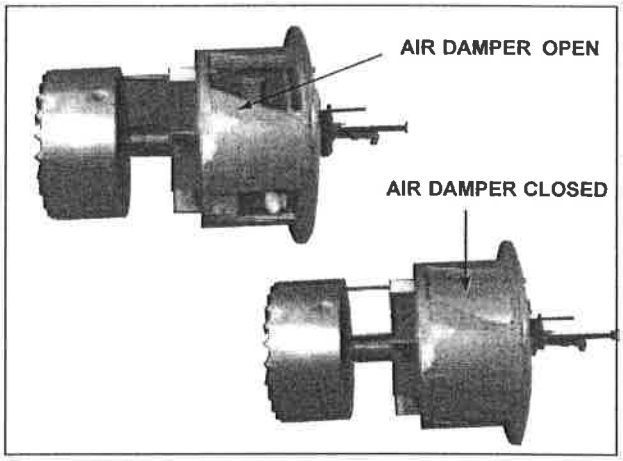

Figure: 2-1 Burner Drawer

All CB boilers have the burner assembly attached to the front head. The entire head may be swung open for inspection and maintenance.

Combustion air is provided by a centrifugal blower located in the front head (Figure 2-5, 2-7 & 2-8). Combustion air flow diagrams for both the CB-LE and the standard CB boiler are shown in figure 2-2 and figure 2-3. Combustion air delivery to the burner is under the control of the modulating motor (Figure 2-4). The motor also regulates the flow of fuel through a linkage system connected to the gas butterfly valve and/or oil through a cam-operated metering valve. Fuel input and air are thus properly proportioned for most efficient combustion.

Filtered primary air for atomizing fuel oil is furnished independently of combustion air by an air pump. The standard 60" firetube boiler is equipped with the belt driven air pump (Figure 2-5). The 60" CB-LE uses the frame mounted air pump (Figure 2-6).

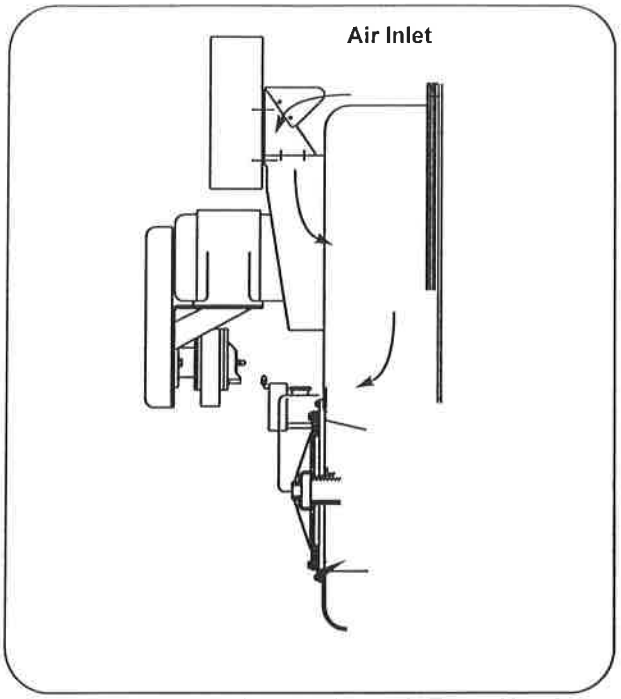

Figure: 2-2 Air Intake Through Front Head

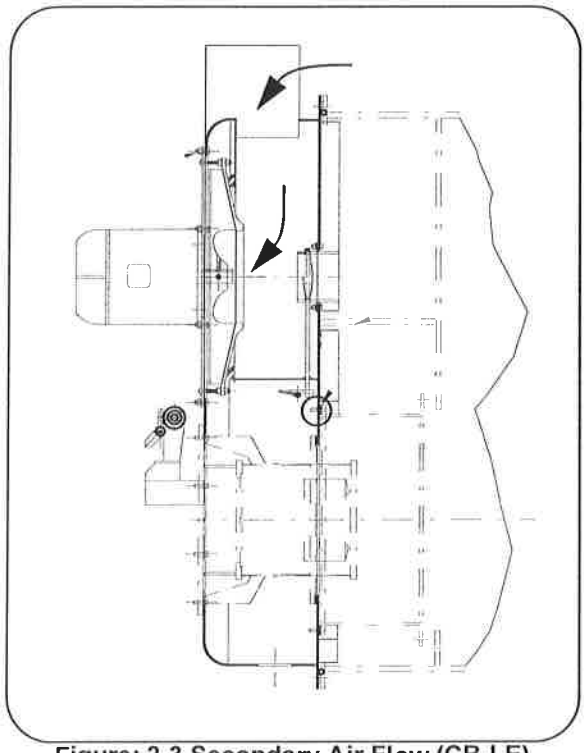

Figure: 2-3 Secondary Air Flow (CB-LE)

The burner control circuit operates on 115 volt, single phase 60 Hz (or 50 Hz when equipped) alternating current. The forced draft fan motor is generally operated on 3-phase service at the available main power supply voltage.

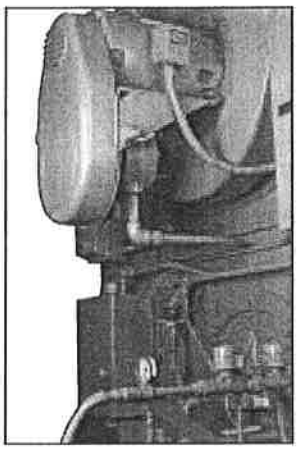

Figure: 2-5 Belt Driven Air Pump (CB)

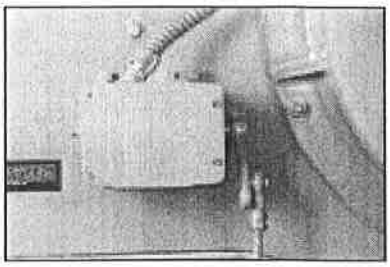

Figure: 2-4 Modulating Motor

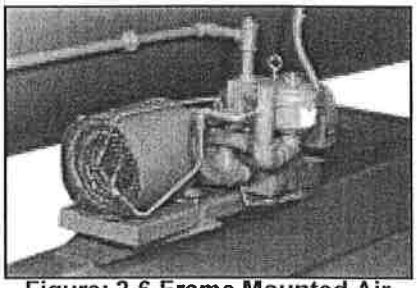

Figure: 2-6 Frame Mounted Air Pump (CB-LE or CB Option)

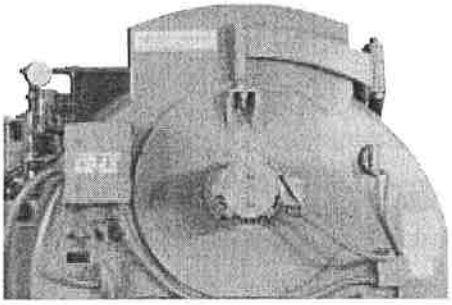

Figure: 2-7 Forced Draft Fan Motor CB-LE

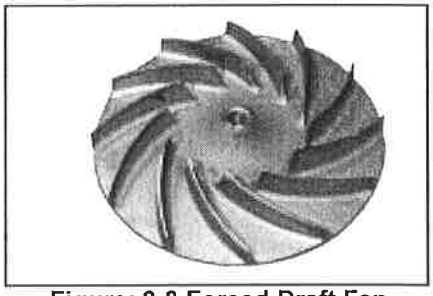

Figure: 2-8 Forced Draft Fan

Indicator lights signaling load demand, fuel valve, low water, and flame failure conditions are standard equipment.

In addition to the standard basic controls supplied, other devices may be required to meet specific requirements of an insurance carrier or local code. Refer to the Wiring Diagram (WD) prepared by Cleaver-Brooks for your specific installation to determine the specific controls in the burner and limit control circuits. The function of individual components is outlined in Chapter 2 and the electrical sequence is covered in Chapter 3.

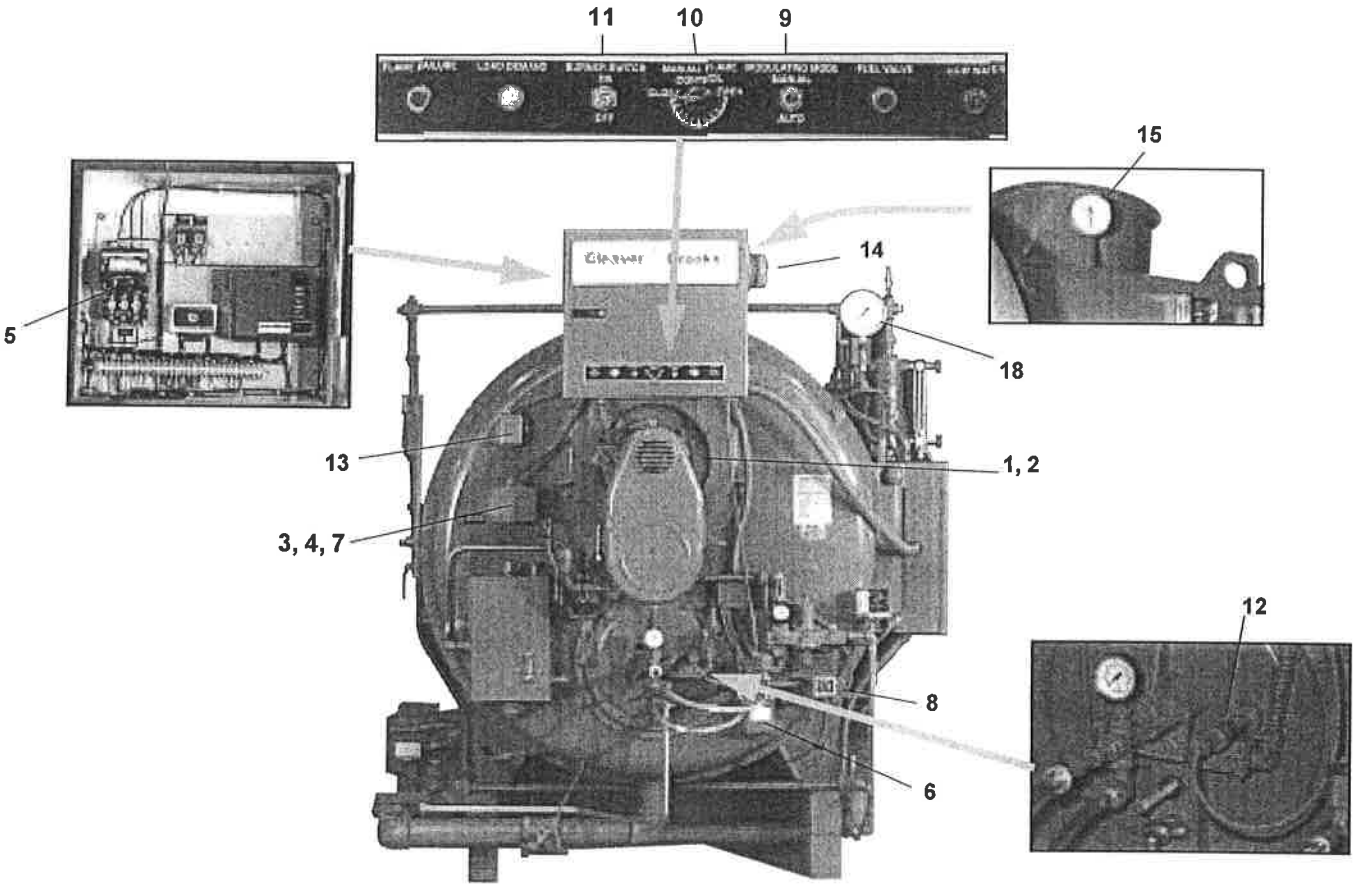

Note: This figure shows front door arrangement for a standard CB.

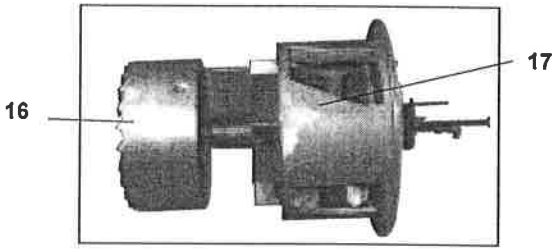

1. FORCED DRAFT FAN MOTOR (FIGURE 2-7 CB-LE)
2. FORCED DRAFT FAN (FIGURE 2-8)
3. MODULATING MOTOR (FIGURE 2-4)
4. MODULATING MOTOR TRANSFORMER
5. FORCED DRAFT FAN MOTOR STARTER
6. IGNITION TRANSFORMER
7. LOW FIRE SWITCH
8. ATOMIZING AIR PROVING SWITCH
9. MANUAL-AUTOMATIC SWITCH
10. MANUAL FLAME CONTROL
11. BURNER SWITCH
12. FLAME DETECTOR
13. COMBUSTION AIR PROVING SWITCH
14. ALARM
15. STACK THERMOMETER
16. DIFFUSER
17. ROTARY AIR DAMPER
18. PRESSURE GAUGE

Figure: 2-9 Controls Common to All Boilers

B. CONTROL AND COMPONENT FUNCTION

The term "control" covers the more important valves and components, including, but not limited to electrical controls or those monitored by the program relay. The operator must become familiar with the individual functioning of all controls before understanding boiler operation and procedures outlined in this manual.

Before proceeding, identify and locate each item using the callout in the illustration.

The actual controls furnished with any given boiler will depend upon the type of fuel for which it is equipped, and whether it is a hot water or steam boiler. Refer to the applicable group or groups within Chapter 2 that apply to the particular boiler.

Boilers with optional features may have control components not listed here.

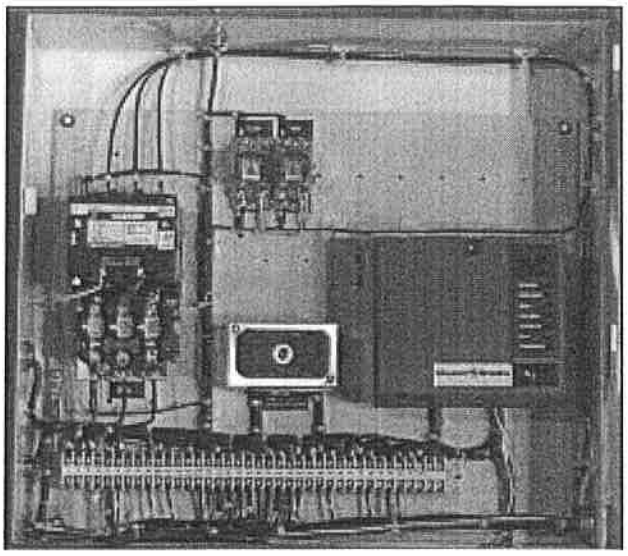

Figure: 2-10 Control Box

C. COMPONENTS COMMON TO ALL BOILERS

1. Forced Draft Fan Motor (Figure 2-7): Drives the forced draft fan directly to provide combustion air. Also referred to as a blower motor.
2. Forced Draft Fan (Figure 2-8): Provides all air, under pressure, for combustion of pilot fuel and main fuel, and for purging.
3. Modulating Motor (Figure 2-4 & 2-9): Operates the rotary air damper and fuel metering valves through a cam and linkage system to provide proper air/fuel ratios under all boiler load conditions.
4. Modulating Motor Transformer (Figure 2-9) (located in the mod motor): Reduces control circuit voltage (115 Vac) to required voltage (24Vac) for operation of the modulating motor.
5. Forced Draft Fan Motor Starter (Figure 2-9 & 2-10): Energizes forced draft fan (blower) motor.
6. Ignition Transformer (Figure 2-9): Provides high voltage spark for ignition of gas pilot or light oil pilot.
7. Low Fire Switch (Not Shown, located in the mod motor): An internal auxiliary switch, cam actuated by the motor shaft, which must be closed to indicate that the air damper and fuel metering valve are in the low fire position before an ignition cycle can occur.
8. Atomizing Air Proving Switch (Figure 2-10): A pressure-sensitive switch actuated by air pressure from the Air Pump. Its contacts close to prove presence of atomizing air. The fuel valves cannot be energized unless this switch is satisfied.
9. Manual-Automatic Switch (Figure 2-9): When set at "automatic," subsequent operation is at the command of the modulating control, which governs the position of the modulating motor in accordance with load demand. When set at "manual," the modulating motor, through the manual flame control, can be positioned at a desired burner firing rate. The primary purpose of the manual position is for testing and setting the air/fuel ratio through the entire firing range.
10. Manual Flame Control (Figure 2-9): A manually operated potentiometer that permits the positioning of the modulating motor to a desired burner firing rate when the manual-automatic switch is set on "manual". It is used primarily for initial or subsequent setting of fuel input throughout the firing range. It has no control over the firing rate when the manual-automatic switch is set on "automatic."
11. Burner Switch (Figure 2-9 & 2-10): A manually operated start-stop switch for directly starting and stopping operation of burner.
12. Flame Detector (Figure 2-9): Monitors gas or oil pilot and energizes the programmer flame relay in response to a flame signal. It continues to monitor main flame (oil or gas) after expiration of pilot providing period. A standard equipped boiler has a lead sulfide (infrared sensitive) detector.
13. Combustion Air Proving Switch (Figure 2-9): A pressure-sensitive switch actuated by air pressure from the forced draft fan. Its contacts close to prove presence

of combustion air. The fuel valves cannot be energized unless this switch is satisfied. The combustion air proving switch is provided on all gas fired or combination gas-oil burners. An oil fired boiler does not normally have a separate switch but utilizes the atomizing air proving switch to the same effect, since the presence of atomizing air from the air pump, which is belt driven from the blower motor, is evidence of blower operation.

14. Alarm (Figure 2-9): Sounds to notify the operator of a condition requiring attention. The alarm is available as optional equipment.
15. Stack Thermometer (Figure 2-9): Indicates temperature of vented flue gases.
16. Diffuser (Figures 2-9): A circular plate, located at the furnace end of the burner drawer, that imparts a rotary swirling motion to combustion air immediately prior to its entering the flame, thus providing a thorough and efficient mixture with the fuel.
17. Rotary Air Damper (Figures 2-9): Provides accurate control of combustion air in proportion to fuel input for various load demands. It consists of two concentric cylinders with openings. The outer is stationary. The inner is rotated, under control of the modulating motor, to vary the effective size of the openings where they overlap.
18. Indicator Lights (Figure 2-10): Provide visual information of boiler operation as follows (indicator lights vary with controls provided):
    - •Flame Failure
    - •Load Demand
    - •Fuel Valve (valve open)
    - •Low Water
19. Program Relay and Flame Safeguard Control (Figure 2-9): Automatically programs each starting, operating and shutdown period in conjunction with operating limit and interlock devices. Includes, in a timed and proper sequence, the operation of the blower motor, ignition system, fuel valve(s), and the damper motor. The sequence includes air purge periods prior to ignition and upon burner shutdown.

The flame detector portion of the control monitors both oil and gas flames and provides protection in the event of loss of a flame signal.

The control recycles automatically during normal operation, or following a power interruption. It must be manually reset following a safety shutdown caused by a loss of flame. An internal checking circuit, effective on every start, prevents burner operation in the event anything causes the flame relay to hold in during this period.

D. CONTROLS FOR GAS FIRING

Depending upon the requirements of the insurance carrier or other governing agencies, the gas flow control system, or gas train, may consist of some, or all, of the following items. Refer to the Dimension Diagram (DD) prepared by Cleaver-Brooks for your specified installation.

1. Gas Pilot Valve (Figure 2-11): A solenoid valve that opens during the ignition period to admit fuel to the pilot. It closes after main flame is established. The sequence of energizing and de-energizing is controlled by the programming relay. A second gas pilot valve may be required by insurance regulations.
2. Gas Pilot Vent Valve (Figure 2-11): When a second gas pilot valve is required, a normally open vent valve (optional equipment) is installed between them. Its purpose is to vent gas to the atmosphere, should any be

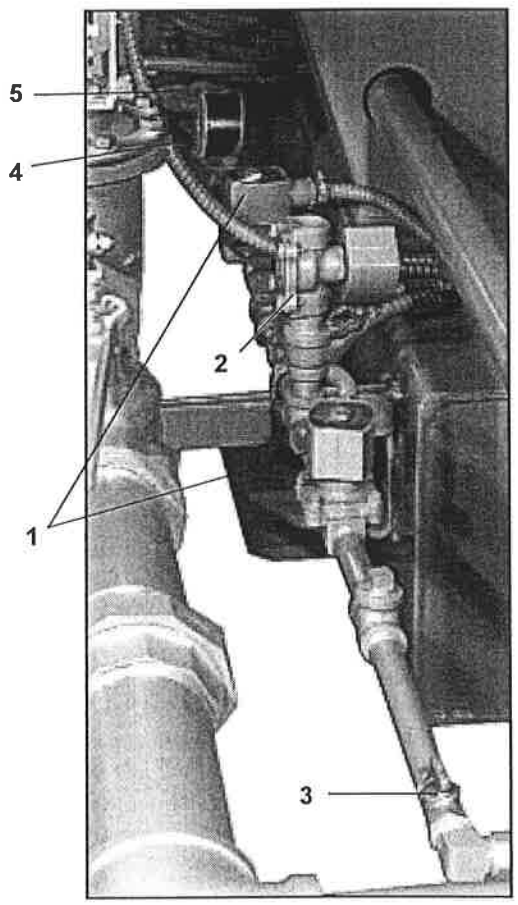

1. GAS PILOT VALVES
2. GAS PILOT VENT VALVE
3. GAS PILOT SHUTOFF COCK
4. GAS PRESSURE GAUGE
5. GAS PRESSURE REGULATING VALVE

Figure: 2-11 Pilot Gas Train

present in the pilot line when the pilot valves are closed. The valve closes when the pilot valves are energized.

3. Gas Pilot Shutoff Cock (Figure 2-11): For manually opening or closing the gas supply to gas pilot valve.
4. Gas Pressure Gauge (Figure 2-11): Indicates gas pressure to pilot.
5. Gas Pressure Regulating Valve (Figure 2-11): Reduces incoming gas pressure to suit the pilot.
6. Gas Pilot Aspirator (Figure 2-12): Provides complete mixing of gas and air to the pilot.
7. Gas Pilot Adjusting Cock (Figure2-12): Regulates the size of the gas pilot flame.
8. Gas Modulating Cam (Figure 2-13): An assembly, consisting of a quadrant, a series of adjustable allen-head screws and a contour spring, provided for adjustment of gas input at any point in the modulating range.
9. Main Gas Cock (Figure 2-14, 15): For manually opening and closing the main fuel gas supply downstream of the main gas line pressure regulator. A second shutoff cock, downstream of the main gas valve(s), is installed to provide a means of shutting off the gas line whenever a test is made for leakage across the main gas valve.
10. Butterfly Gas Valve (Figure 2-14, 15): The pivoted disc in the valve is actuated by connecting linkage from the gas modulating cam to regulate the rate of gas flow to the burner.
11. Main Gas Valves (Figure 2-14, 15): Electrically actuated shutoff valves that open simultaneously to admit gas to the burner. The downstream valve is equipped with a "proof of closure" switch that is connected into the pre-ignition interlock circuit.
12. Main Gas Vent Valve (Figure 2-14, 15): A normally open solenoid valve installed between the two main gas valves to vent gas to the atmosphere should any be present in the main gas line when the gas valves are deenergized. The vent valve closes when the gas valves are energized.
13. Low Gas Pressure Switch (Figure 2-14, 15): A pressure-actuated switch that is closed whenever main gas line pressure is above a preselected pressure. Should the pressure drop below the setting, the switch contacts open a circuit causing the main gas valve(s) to close, or prevent the burner from starting. The switch is usually equipped with a device that must be manually reset after being tripped.
14. High Gas Pressure Switch (Not Shown): A pressure actuated switch that is closed whenever main gas line pressure is below a preselected pressure. Should the pressure rise above the setting, the switch contacts will open a circuit causing the main gas valve(s) to close, or prevent the burner from starting. The switch is usually equipped with a device that must be manually reset after being tripped.
15. Leakage Connection (Not Shown): The body of the gas valve has a plugged opening that is used whenever it is necessary to conduct a test for possible leakage across the closed valve.

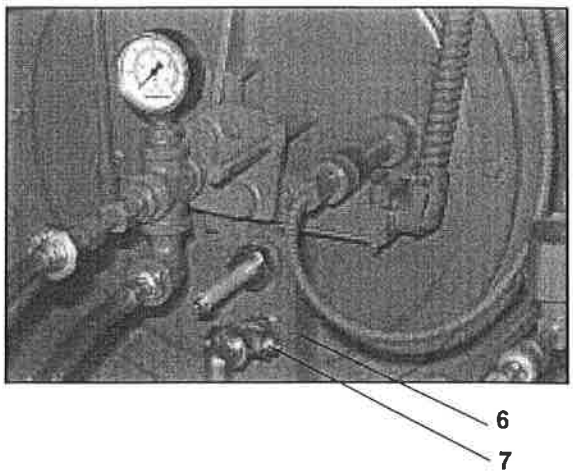

6. GAS PILOT ASPIRATOR
7. GAS PILOT ADJUSTING COCK

Figure: 2-12 Burner Drawer Back Plate

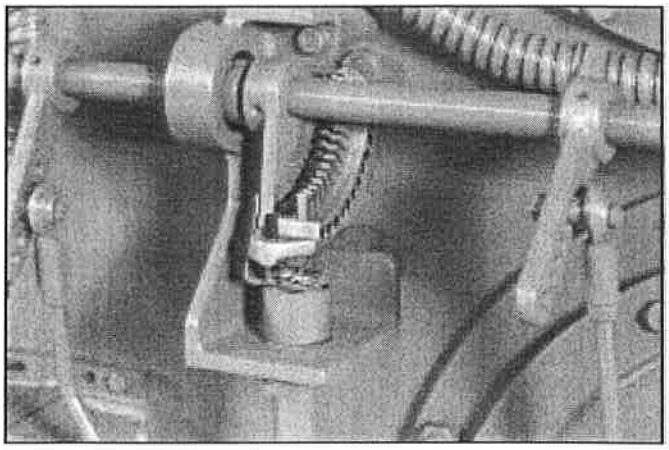

Figure: 2-13 Gas Modulating Cam

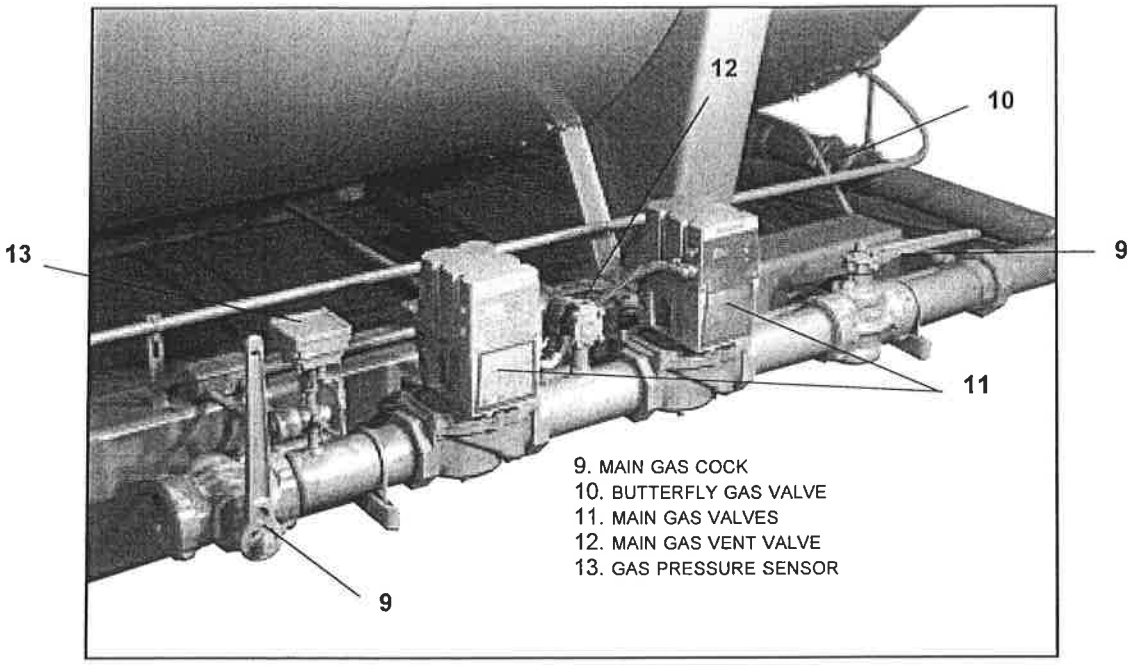

Figure: 2-14 Gas Train (CB-HAWK)

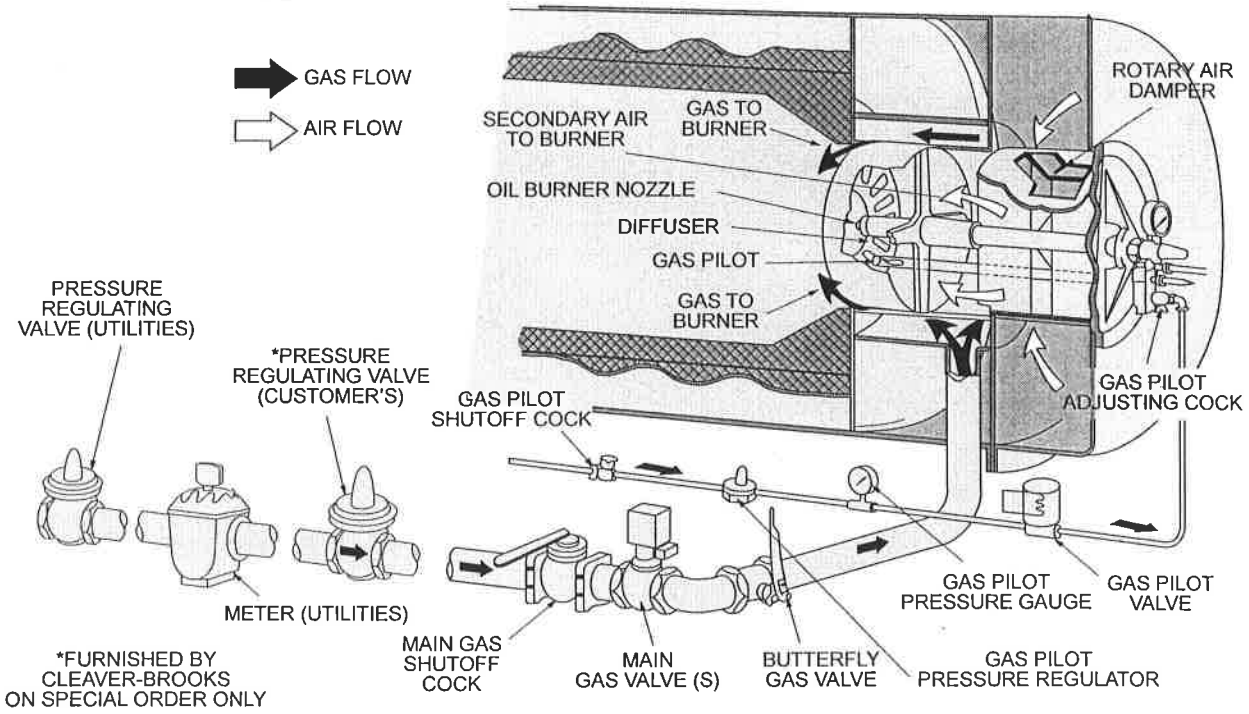

Figure: 2-15 Secondary Air Flow With Gas Train

E. CONTROLS COMMON TO OIL-FIRED BOILERS (INCLUDING COMBINATION)

The following items are applicable to all oil fired or gas and oil fired boilers. Additional controls for No. 6 oil are listed in Section I.

1. Oil Drawer Switch (Figure 2-16): Opens the limit circuit if oil drawer burner gun is not latched in the forward position required for burning oil.
2. Atomizing Air Proving Switch (Figure 2-16): Pressure-actuated switch whose contacts are closed when sufficient atomizing air pressure from the air pump is present for oil firing. Oil valve(s) will not open, or will not remain open, unless switch contacts are closed.
3. Atomizing Air Pressure Gauge (Figure 2-16): Indicates the atomizing air pressure at the burner gun
4. Oil Solenoid Valve (Figure 2-16): Opens when energized through contacts in the programmer and allows fuel oil flow from the oil metering valve to the burner nozzle. A light oil fired burner uses two valves operating simultaneously.
5. Fuel Oil Controller (Figures 2-16 & 2-17): An assembly combining into a single unit the gauges, regulators and valves required for regulating the flow of fuel oil. All controllers have the following integral parts. In addition to these, the controller used on a No. 6 oil fired burner has additional components described in Section I.
   A. Oil Metering Valve: Valve metering stem moves to increase or decrease the orifice area to regulate the supply of fuel oil to the burner nozzle in accordance with boiler load variances. Stem movement is controlled by the modulating motor through linkage and the oil metering cam.
   B. Oil Modulating Cam: Assembly consisting of a quadrant, a series of adjustable allen-head screws and a contour spring provided for adjustment of oil input at any point in the modulating range.
   C. Oil Burner Pressure Gauge: Indicates pressure of the fuel oil at the metering valve.
   D. Oil Pressure Regulator: For adjustment of the pressure of oil at the metering valve.
6. Oil Relief Valve (Figure 2-16): Maintains a constant oil supply pressure to the fuel oil controller by bypassing excess fuel oil.

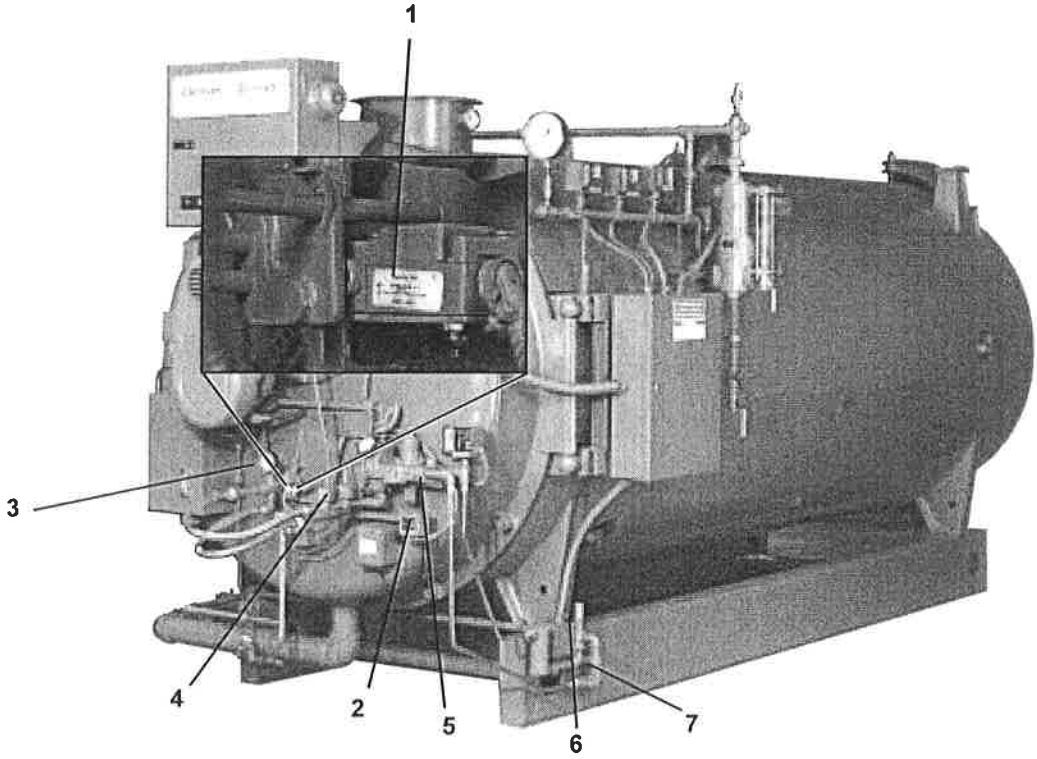

1. OIL DRAWER SWITCH
2. ATOMIZING AIR PROVING SWITCH
3. ATOMIZING AIR PRESSURE GAUGE
4. OIL SOLENOID VALVE
5. FUEL OIL CONTROLLER
6. OIL RELIEF VALVE
7. TERMINAL BLOCK

Figure: 2-16 Components Common to Oil Fired Boilers

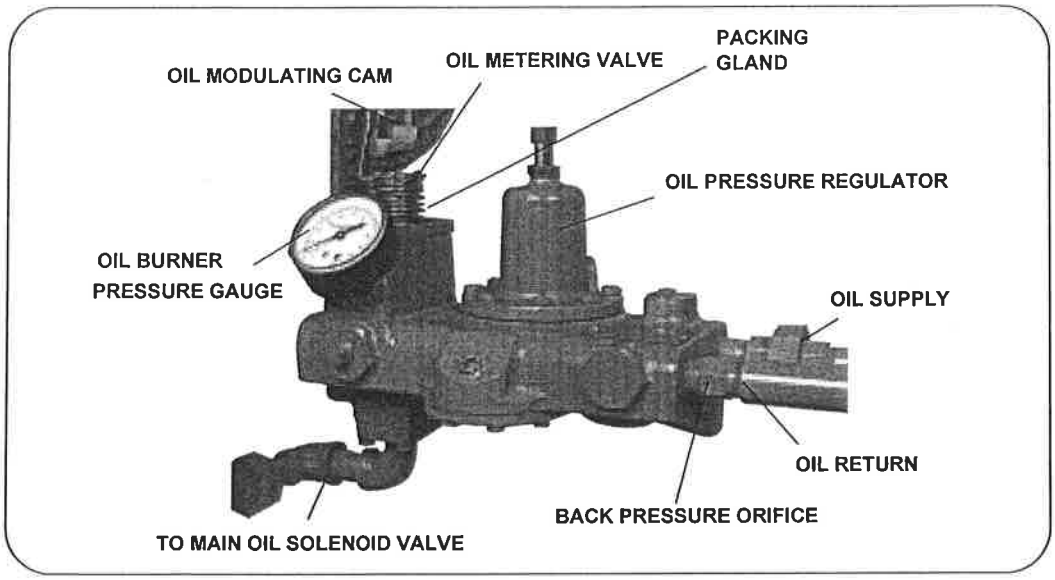

Figure: 2-17 Oil Control Valve Assembly - for Light Oil

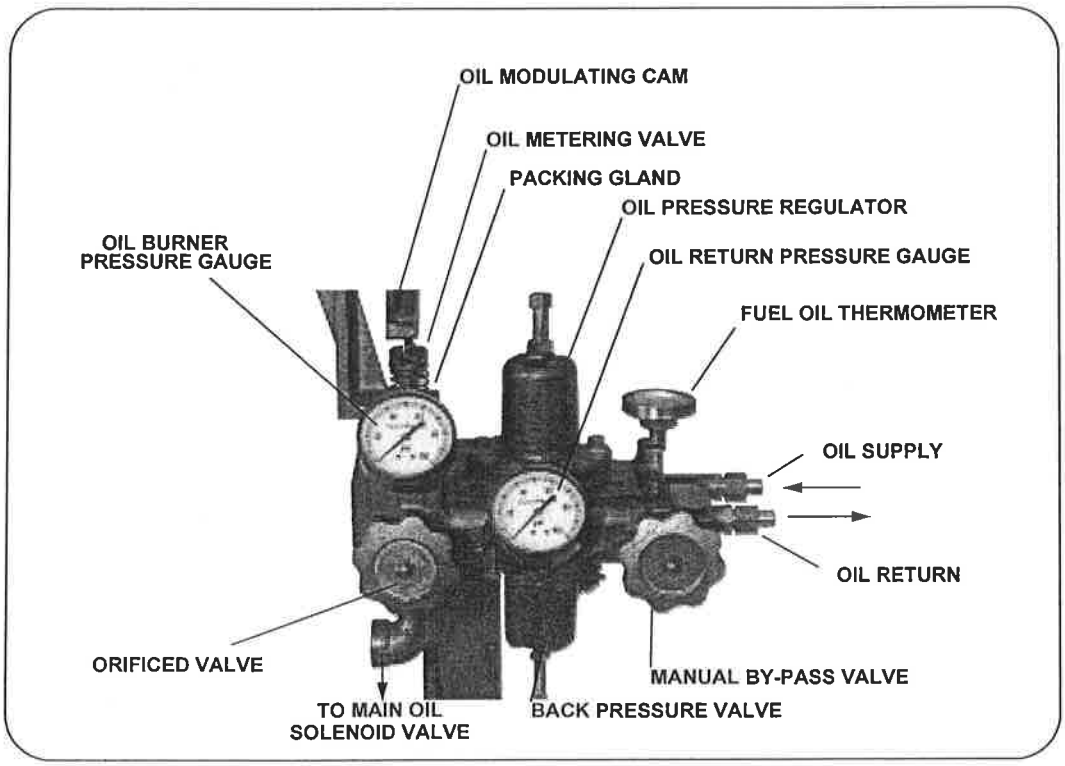

Figure: 2-18 Oil Control Valve Assembly -for Heavy Oil

7. Terminal Block (Figure 2-16): The central connection point for the supply and return oil.

8. Fuel Oil Strainer (Not Shown): Prevents foreign matter from entering the burner system.

9. Gas Pilot: See Section D of Chapter 2 for description of the various components.

10. Light Oil Pilot Valve (Not Shown): When a light oil pilot is furnished, a solenoid valve is provided to control flow of fuel to the pilot nozzle. It is energized through programmer contacts. It is deenergized to shut off pilot fuel flow after main flame is ignited and established.

11. Back Pressure Orifice: A restriction located in the oil return line immediately downstream of the fuel oil controller to create back pressure (100 and 200 series only).`

12. Air Pump Module Assembly (Figures 2-19, 20 & 21): Provides the compressed air required to atomize the fuel oil for proper combustion. The CB-LE air pump module is started automatically by the programmer's sequence. It includes components described A-H.

    A. Air Pump Motor: Drives the air pump and an air cooling fan. The motor is started and stopped simultaneously with the forced draft fan motor.

    B. Air Pump: Provides air for atomization of the fuel oil.

    C. Air Filter: The filter cleans the air supply prior to entering air pump.

    D. Check Valve: Prevents lubricating oil and compressed air from surging back through the pump and air filter when the pump stops.

    E. Air-Oil Receiver Tank: Holds a supply of oil for lubricating the air pump. The receiver tank also separates lube oil from the atomizing air before delivery to nozzle.

    F. Lube Oil Level Sight Glass: Indicates the level of lubricating oil in the air-oil receiver tank.

    G. Lube Oil Cooling Coil: Cools the lubricating oil before it enters the air pump. A fan driven by the air pump motor circulates cooling air over the coil.

    H. Lube Oil Fill Pipe and Strainer: Used when adding oil to the air-oil receiver tank.

13. Low Oil Pressure Switch (Optional): Switch contacts open when the fuel oil pressure drops below selected pressure. Switch will interrupt the limit circuit upon loss of sufficient fuel oil pressure for correct combustion.

14. Fuel Oil Pump (Not Shown): Transfers fuel oil from the storage tank and delivers it under pressure to the burner system.

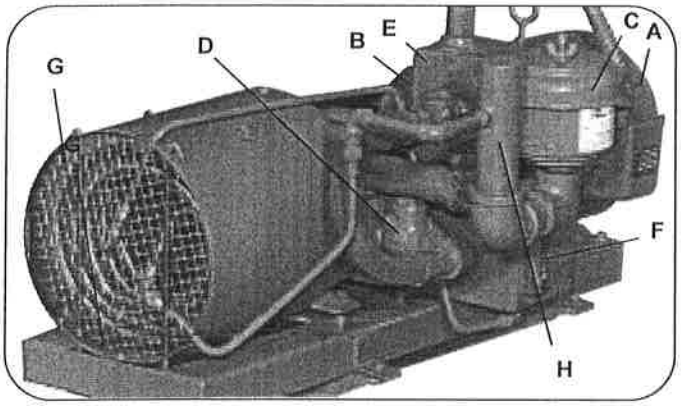

A. AIR PUMP MOTOR
B. AIR PUMP
C. AIR FILTER
D. CHECK VALVE
E. AIR-OIL RECEIVER TANK
F. LUBE OIL LEVEL SIGHT GLASS
G. LUBE OIL COOLING COIL
H. LUBE OIL FILL PIPE

Figure: 2-19 Air Pump (Primary Air) CB-LE (Optional CB)

Figure:2-20 Belt Driven Air Pump (CB)

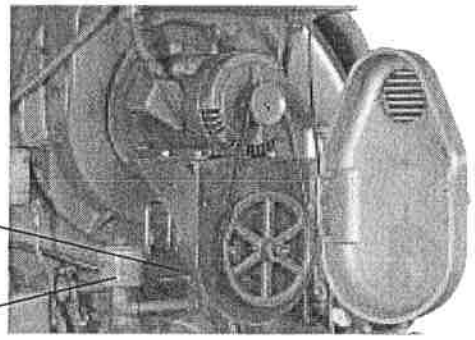

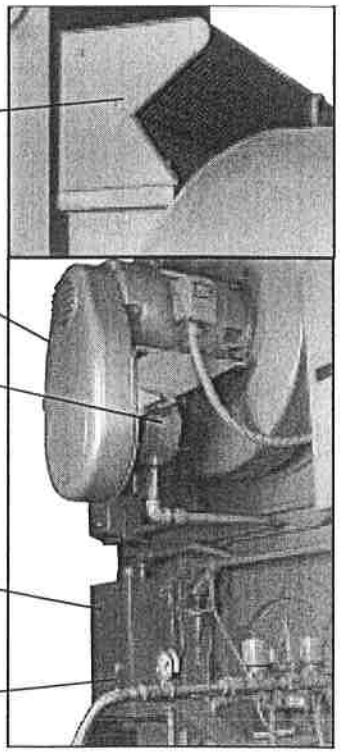

Figure: 2-21 Belt Driven Air Pump Component Locations (CB)

F. ADDITIONAL CONTROLS FOR HEAVY OIL

The oil heater (Figure 2-22 Steam) is provided to heat heavy oil to the point where it can be effectively atomized and burned. Most heavy oil heaters utilize an electric heater to reduce the viscosity of the heavy oil until the point where either steam or hot water is available. Heavy oil heaters operating with hot water will have additional controls not represented in Figure 2-22.

Heater Switch (Not Shown): Manually provides power to the oil heater system.

1. Oil Heater (Electric): Used for heating sufficient fuel oil for low-fire flow during cold starts before steam or hot water is available for heating. The heater must be turned off during extended boiler lay-up, or at any time the fuel oil transfer pump is stopped.
2. Electric Oil Heater Thermostat: Senses fuel oil temperature and energizes or deenergizes the electric oil heater to maintain required temperature of the fuel oil.
3. Steam Oil Heater Thermostat: Senses fuel oil temperature and controls the opening and closing of the steam heater valve to maintain the required temperature of the fuel oil.
4. Oil Heater Shell (Steam/Hot Water): Heats fuel oil through medium of steam or hot water. Electric heater is housed in the steam heater, but is housed separately on a hot water heater. Steam oil heaters on 15 psi boilers operate at boiler pressure. Steam oil heaters furnished on high pressure boilers are to be operated at less than 15 psi. Operation is accomplished with a steam pressure regulator valve.
5. Oil Return To Tank: Excess oil returned to the heavy oils supply tank.
6. Oil Inlet From Supply Tank: Heavy oil inlet from the supply tank.
7. Steam Heater Check Valve: Prevents oil contamination of the waterside of pressure vessel should any leakage occur in the oil heater.
8. Steam Trap: Drains condensate and prevents loss of steam from the steam oil heater. Condensate must be piped to a safe point of discharge.
9. Check Valve (Steam Heater Discharge): Prevents air entry during shutdown periods when cooling action may create vacuum within steam heater.
10. Steam Heater Pressure Regulator: Adjust to provide reduced (usually less than 15 psi) steam pressure to the heater to properly maintain the required fuel oil temperature. The regulator and the pressure gauge are not furnished on 15 psi units.
11. Steam Heater Solenoid Valve: A normally open solenoid valve opened by the steam oil heater thermostat to allow

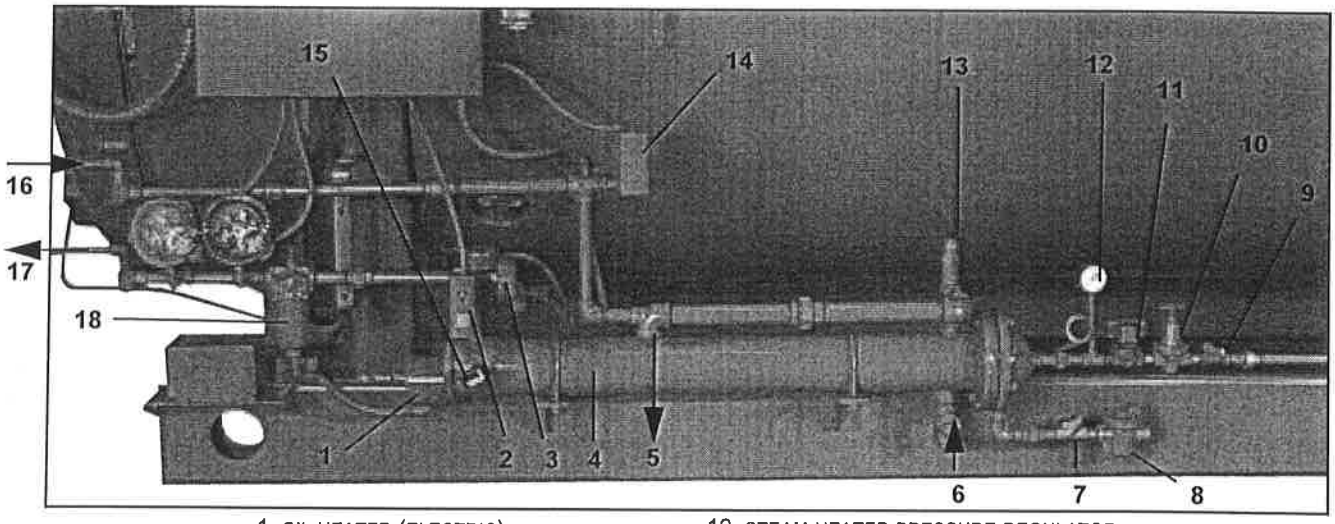

1. OIL HEATER (ELECTRIC)
2. OIL HEATER THERMOSTAT (STEAM)
3. OIL HEATER THERMOSTAT (ELECTRIC)
4. OIL HEATER SHELL
5. OIL RETURN TO TANK
6. OIL INLET FROM TANK
7. CHECK VALVE
8. STEAM TRAP
9. CHECK VALVE
10. STEAM HEATER PRESSURE REGULATOR
11. STEAM HEATER SOLENOID VALVE
12. STEAM PRESSURE GAUGE
13. OIL RELIEF VALVE
14. LOW OIL TEMPERATURE SWITCH
15. OIL SUPPLY PRESSURE GAUGE
16. OIL RETURNED FROM FUEL OIL CONTROLLER
17. HEATED OIL TO BURNER
18. FUEL OIL STRAINER

Figure: 2-22 Oil Heating Assembly (Steam)

flow of steam to the steam heater to maintain temperature of fuel oil.

12. Steam Pressure Gauge: Indicates steam pressure entering the heater.
13. Oil Relief Valve: Allows release of excessive pressure to the return side of the oil line piped to the tank.
14. Low-Oil-Temperature Switch: Thermostatic switch that prevents burner from starting, or stops burner firing if fuel oil temperature is lower than required for oil burner operation.
15. Oil Supply Pressure Gauge: Indicates fuel oil pressure in the oil heater and supply pressure to the fuel oil controller's pressure regulator.

In addition to the components of the fuel oil controller mentioned in Section E, the following are used with a heavy oil fired burner.

A. High-Oil-Temperature Switch (Optional): Switch contacts open when fuel oil temperature raises above a selected temperature. Switch will interrupt the limit circuit in the event fuel oil temperature rises above the selected point.

B. Hot Water Oil Heater Thermostat: Used on a hot water boiler to sense fuel oil temperature and control the starting and stopping of the booster water pump.

C. Booster Water Pump: Started and stopped by the hot water thermostat to regulate the flow of hot water through the hot water oil heater to maintain temperature of fuel oil.

D. Fuel Oil Thermometer: Indicates temperature of fuel oil being supplied to the fuel oil controller.

E. Back Pressure Valve: For adjustment of oil pressure on the downstream side of the metering valve. Also regulates rate of return oil flow.

F. Oil Return Pressure Gauge: Indicates oil pressure on the return side of the fuel oil controller.

G. Manual By-Pass Valve: Provided as a time saver in establishing oil flow. When open, it permits circulation of oil through the supply and return lines. The valve **must** be closed prior to initial light off.

H. Orifice Oil Control Valve: Valve may be opened prior to start-up to aid in establishing fuel oil flow through the controller. The valve must be closed prior to initial light off. Its disc has an orifice to permit a continuous circulation of hot fuel oil through the controller.

I. Air Purge Valve: Solenoid valve opens simultaneously with closing of oil solenoid valve at burner shutdown, allowing compressed air to purge oil from the burner nozzle and adjacent piping. The oil is burned by the diminishing flame, which continues burning for approximately 4 seconds after the oil solenoid valve closes.

J. Air Purge Orifice Nozzle: Limits purging air to proper quantity for expelling unburned oil at normal delivery rate.

K. Air Purge Orifice Nozzle Filter: Filters the purging air of any particles that might plug the air purge orifice nozzle.

L. Air Purge Check Valve: Valve check prevents fuel oil from entering the atomizing air line.

M. Air Purge Relay: When energized, controls operation of air purge valve.

G. CONTROLS FOR COMBINATION BURNERS ONLY

(1) Gas-Oil Switch (Figure 2-23): Burners equipped to burn either oil or gas include equipment for each fuel. The selector switch engages the appropriate interlocks and controls for gas or oil operation. Chapter 4 details the required mechanical functions of each fuel system.

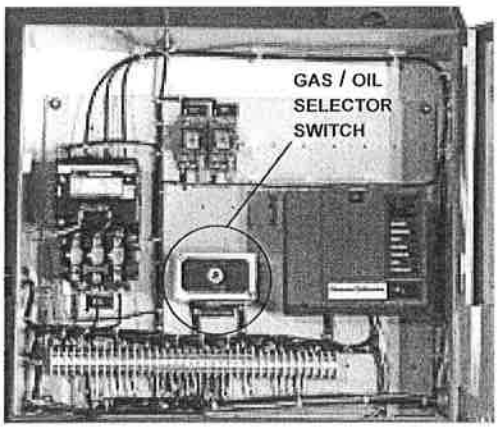

Figure: 2-23 Standard Control Panel

H. COMBUSTION AIR

Air for combustion of fuel (often referred to as "secondary" air) is furnished by the forced draft fan (Figure 2-24) mounted in the boiler head. In operation, air pressure is built up in the entire head and is forced through a diffuser plate for a thorough mixture with the fuel for proper combustion. The supply of secondary air to the burner is governed by automatically throttling the output of the fan by regulating the rotary air damper. The damper provides the proper amount of air for correct ratio of air to fuel for efficient combustion at all firing rates.

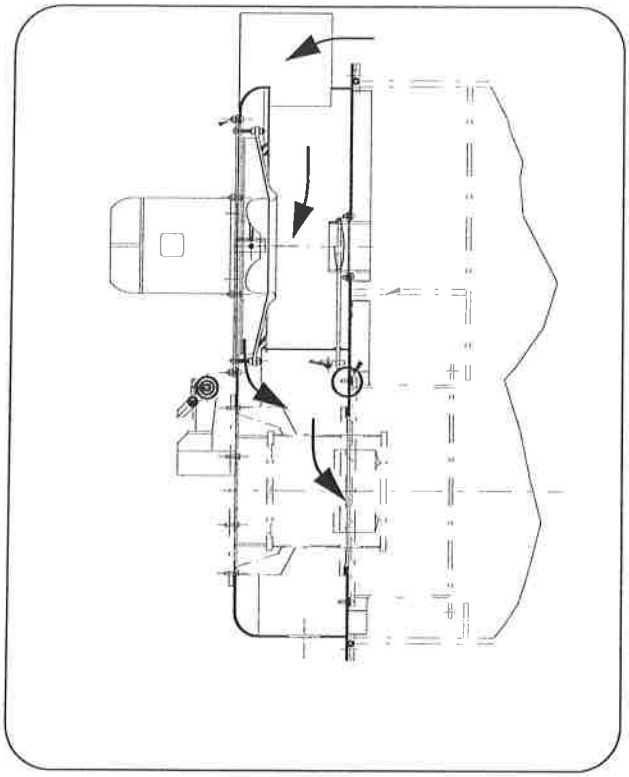

Figure: 2-24 Secondary Air Flow Diagram (CB-LE)

I. AUTOMATIC IGNITION

Oil or gas burners are ignited by an interrupted-type pilot. The pilot flame is ignited automatically by an electric spark.

The series 100 burner usually is equipped with a pilot fired with light oil fuel. All other burners are equipped with a gas burning pilot. In the case of a combination burner, the gas pilot is used to ignite either the main gas flame or the oil flame. Either pilot serves the same function. Unless exception is taken in the text, the term pilot is used interchangeably.

At the beginning of the ignition cycle, and governed by the program relay, the pilot solenoid valve and ignition transformer are simultaneously energized.

The ignition transformer supplies high voltage current for the igniting spark. A gas pilot has a single electrode and a spark arcs between the tip of the electrode and the wall of the tube surrounding it. A light oil pilot has two electrodes and the arc is between their tips. The pilot solenoid valve and the transformer are deenergized after main flame is ignited and established.

Fuel for the gas pilot is supplied from the utility's main, or from a tank (bottle) supply. Secondary air flows into and mixes with the pilot gas stream to provide an adequate flame. Insurance regulations may require two gas pilot solenoid valves with a normally open vent valve between them. The vent valve closes when the gas pilot valves open, and opens when the gas pilot valves shut to vent gas, should any be present in the pilot line during the deenergized period of the gas pilot valves.

Fuel for a light-oil pilot is provided from the line that supplies oil under pressure for the main flame. A solenoid actuated valve controls flow of oil to the pilot nozzle. The valve is energized simultaneously with the ignition transformer at the beginning of the ignition cycle and is deenergized after main flame is ignited and established.

J. ATOMIZING AIR

Air for atomizing the fuel oil (often referred to as "primary air") is pumped by the air pump into the air-oil receiver tank and delivered under pressure through a manifold block to the oil burner nozzle.

The atomizing air mixes with the fuel oil just prior to the oil leaving the nozzle.

Atomizing air pressure is indicated by the air pressure gauge on the burner gun.

Air pressure from the pump also forces sufficient oil from the tank to the pump bearings to lubricate them and also to provide a seal and lubrication for the pump vanes. As a result, the air delivered to the tank contains some lube oil; however, most of it is recovered through baffles and filters in the tank before the air passes to the burner.

Some of the primary air is also used to assist the oil pressure regulators of the fuel oil controller. Further explanation is given in chapter 5.

K. OIL FUEL FLOW - LIGHT OIL

The oil fuel flow system schematic is shown in Figure 2-25. Oil flow is indicated by arrows and the pertinent controls are called out. Fuel oil is delivered into the system by a supply pump which delivers part of its discharge to the oil burner. Excess oil is returned to the oil storage tank through the fuel oil relief valve and oil return line. Normally the pump operates only while the burner is in operation, although a positioning switch is often provided so that either continuous or automatic pump operation can be obtained.

The oil flows through a fuel oil strainer to prevent any foreign material from flowing through the control valves and nozzle. The fuel oil controller contains in a single unit, a metering valve, a regulator, and a gauge required to regulate the pressure and flow of oil to the burner. The adjustable regulator controls the pressure. To assist in the regulation, back

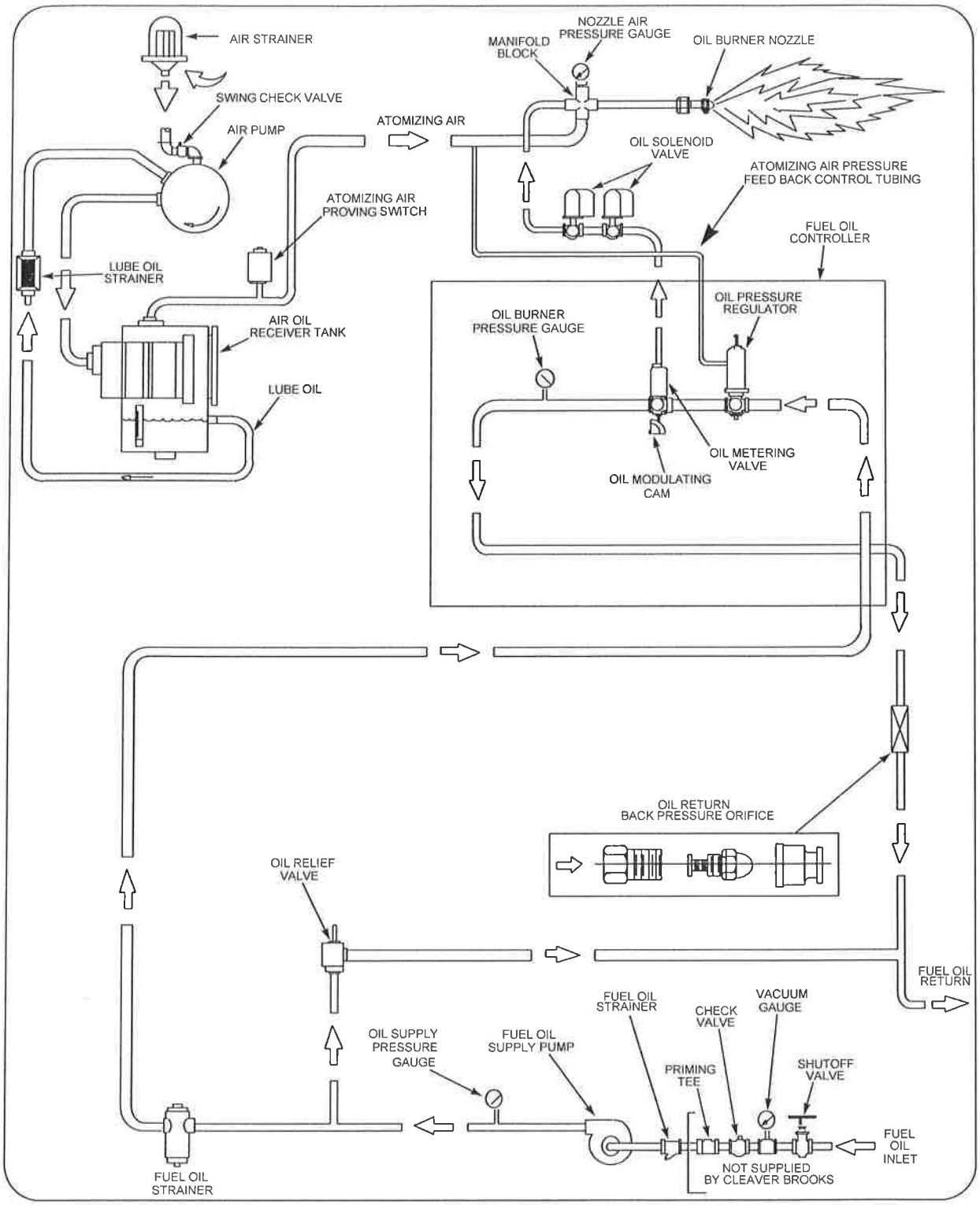

Figure: 2-25 Schematic Diagram for Light Oil Flow

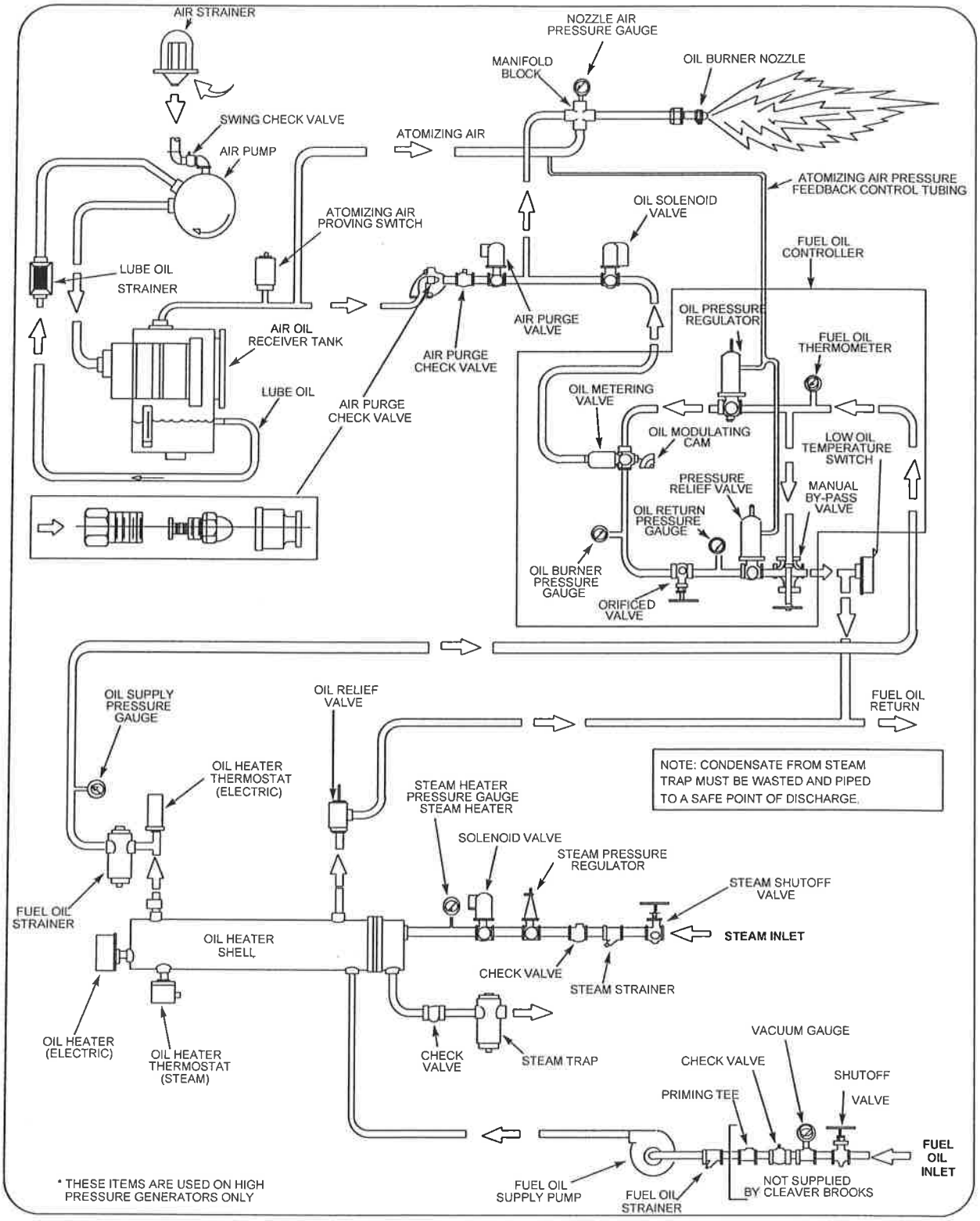

Figure: 2-26 Schematic Diagram for No. 6 Heavy Oil Flow (Steam-Electric Heater)

pressure is created by an orifice nozzle located in the oil return line immediately downstream of the fuel oil controller.

The programming relay energizes or deenergizes the solenoid oil valves to permit or cut off oil flow to the burner. Two valves, operating simultaneously, are used. The valves are closed when deenergized. They cannot be opened (energized) unless the combustion air proving switch and the atomizing air proving switch are closed. The two switches are satisfied, respectively, by sufficient combustion air pressure from the forced draft fan and pressurized air from the air pump.

The oil flow to the burner is controlled by the movement of the metering stem in the oil metering valve, which varies the flow to meet load demands. The metering valve and the air damper are controlled simultaneously at all times by the modulating motor to proportion combustion air and fuel for changes in load demand.

L. OIL FUEL FLOW - HEAVY OIL

The oil fuel flow and circulating system is shown in schematic diagram form in Figures 2-26. The pertinent controls are called out and the oil flow is indicated by arrows.

Fuel oil is delivered into the system by the fuel oil supply pump which delivers part of its discharge to the oil heater. The remainder of the fuel oil returns to the oil storage tank through a fuel oil relief valve and oil return line.

The combination electric and steam oil preheater is controlled by thermostats. The electric oil heater thermostat energizes the electric heater, which is provided to supply heated oil on cold starts. The steam heater thermostat controls operation of the steam solenoid valve to permit a flow of steam to the heater when steam is available.

A hot water boiler is equipped to heat the oil with hot water from the boiler, unless other preheating equipment is utilized. The electric heater, which is housed separately, is sized to provide heated oil on a cold start. The hot water thermostat controls the operation of a pump that supplies hot water to the oil heater when hot water is available.

The heated oil flows through a fuel oil strainer to prevent any foreign matter from entering the control valves and nozzle.

The fuel oil controller contains, in a single unit, the necessary valves, regulators and gauges to regulate the pressure and flow of oil to the burner.

The program relay energizes or deenergizes the solenoid oil valve to permit or cut off oil flow to the burner. The oil solenoid is closed when deenergized. It cannot be opened (energized) unless the combustion air proving switch, the atomizing air proving switch, and the low oil-temperature and any pressure switches are closed. They are satisfied, respectively, by sufficient combustion air pressure from the forced draft fan, pressurized air from the air pump and sufficient oil temperature and pressure.

Oil flow to the burner is controlled by the movement of the metering stem of the oil metering valve, which varies the flow to meet load demands. The metering valve and the air damper are controlled simultaneously at all times by the modulating motor to proportion combustion air and fuel for changes in load demand.

Oil is purged from the burner gun upon each burner shutdown. The air purge solenoid valve opens as the fuel valve closes, diverting atomizing air through the oil line. The air assures a clean nozzle and line for subsequent restart.

M. GAS FUEL FLOW

Metered gas from the utility flows through the pressure regulator at a reduced pressure suitable to burner requirements, through the main gas shutoff cock, main gas valve(s), and modulating butterfly gas valve to the non-premix orifice-type burner.

The main gas valve is of the normally closed type, and is opened (energized) in proper sequence by the programming relay.

The butterfly gas valve modulates the flow of gas from low through high fire settings. The position of the butterfly valve disc is governed by the gas modulating cam. The butterfly gas valve, and the air control damper are controlled simultaneously by the modulating motor to proportion combustion air and fuel for changes in load demand.

The gas flow rate required for rated burner input depends upon the heating value (Btu/cubic foot) of the gas supplied. The gas pressure regulator adjusts the gas pressure (flow rate) to the entrance of the gas train. The regulator is not always supplied with the burner, but may be provided by others.

The main gas valves cannot be energized (opened) unless the combustion air proving switch is closed to indicate a sufficient supply of combustion air. The low gas pressure and high gas pressure switches must be closed to prove sufficient, but not excessive, gas fuel pressure.

N. MODULATING FIRING

The modulating motor, through a linkage arrangement (Figure 2-27), controls the air damper and the butterfly gas valve, or the oil metering valve, to maintain a constant air/fuel ratio throughout the firing range.

During burner operation, the motor is controlled by a modulating pressure control on a steam boiler, or by a modulating temperature control on a hot water boiler. A manually operated potentiometer is provided to permit positioning of the motor at the desired burner firing rate. The potentiometer is used primarily for initial or subsequent checking and setting of fuel input. Normal operation should be with the manual-automatic switch in the "automatic" position and under the control of the modulating control.

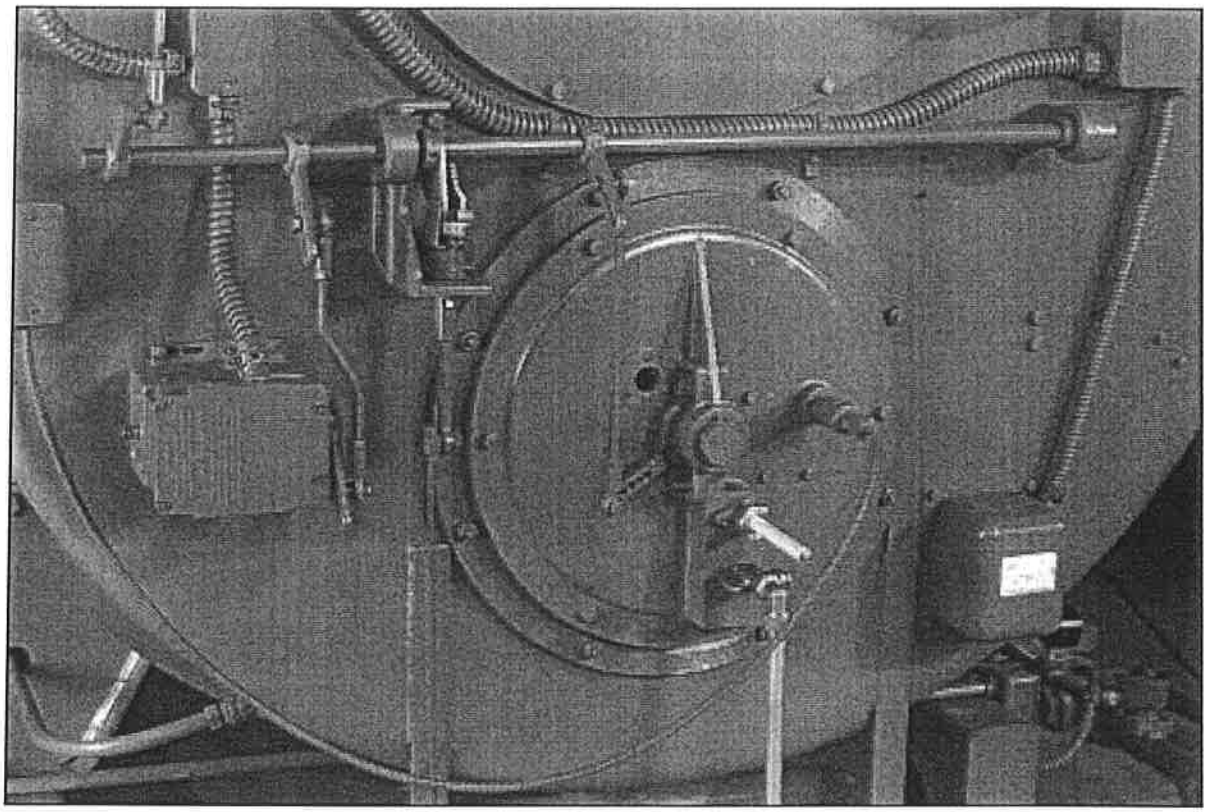

Figure: 2-27 Burner Drawer and Fuel Linkage Assemblies (CB-LE)

The modulating motor (commonly called a damper motor) is reversible. It has an internal limit switch that restricts shaft rotation to 90°. During normal operation the motor will move in either direction or stop at any position within the range.

The motor potentiometer is electrically connected to a matching potentiometer in the modulating control. Changing steam pressure or water temperature alters the electrical resistance of the modulating controller potentiometer. The change in resistance compels an integral balancing relay to start, stop, or reverse the motor rotation. Rotation in either direction continues until the resistance ratio of the two potentiometers is equal.

When the resistance ratio is equal, the motor stops in a position that allows the proper fuel and combustion air flow to meet operating demands.

A feature designed into the circuitry maintains the modulating motor in the low-fire position during ignition and keeps it there until the main flame is established. A low-fire switch, integral to the motor, is actuated by the rotation of the motor. The switch must be closed to establish that the damper and fuel metering valves are in the low-fire position before the programmer commences into the ignition period. During this time, neither the manual flame control nor the modulating control have any control over the damper motor, regardless of their setting.

An optionally equipped boiler uses a second integral switch to establish that the motor has driven the damper to an open position during the pre-purge period. The second integral switch closes, as high fire position is approached, to complete an internal circuit in the programmer to allow continuation of the programming cycle.

Notes

CHAPTER 3

WATERSIDE CARE AND REQUIREMENTS

A. General 3-1
B. Water Requirements 3-1
C. Water Treatment 3-5
D. Cleaning 3-5
E. Boil-out Of A New Unit 3-6
F. Washing Out 3-7
G. Blowdown Steam Boiler. 3-7
H. Periodic Inspection. 3-9
I. Preparation For Extended Lay-up 3-9

A. GENERAL

The operator should be familiar with Chapter 3 before attempting to place the unit into operation.

Although it is of prime importance, the subject of water supply and treatment cannot adequately be covered in this manual. For specific information or assistance with your water treatment requirements, contact your Cleaver-Brooks service and parts representative.

Feedwater equipment should be checked and ready for use. Be sure that all valves, piping, boiler feed pumps, and receivers are installed in accordance with prevailing codes and practices.

Water requirements for both steam and hot water boilers are essential to boiler life and length of service. It is vital that care be taken in placing the pressure vessel into initial service. The waterside of new boilers and new or remodeled steam or hot water systems may contain oil, grease or other foreign matter. A method of boiling out the vessel to remove the accumulations is described later in Chapter 3.

Boilers, as a part of a hot water system, require proper water circulation. The system must be operated as intended by its designer in order to avoid thermal shock or severe, possibly damaging, stresses from occurring to the pressure vessel.

Note: This manual only covers boilers using water. Glycol solutions have different operating requirements, circulation rates and temperatures, etc.

B. WATER REQUIREMENTS

1. HOT WATER BOILER

Air Removal

The hot water outlet includes a dip tube which extends 2 to 3 inches into the boiler. The dip tube reduces the possibility of air, which may be trapped at the top of the shell, from entering into the system. Oxygen or air released in the boiler will collect or be trapped at the top of the boiler shell.

The air vent tapping on the top center line of the boiler should be piped into the expansion or compression tank. Air trapped at the top of the boiler will find its way out of the boiler through the tapping.

Minimum Water Temperature - The minimum recommended boiler water temperature is 170°F. When water temperatures lower than 170°F are used, the combustion gases are reduced in temperature to a point where water vapor condenses, causing corrosion in the boiler and possible breeching.

Condensation is more severe on a unit that operates intermittently and which is greatly oversized for the actual load. Condensation can be minimized by maintaining boiler water temperatures above 170°F.

A temperature of 170°F is also recommended in order to provide a sufficient "temperature head" when No. 6 fuel oil is to be heated to the proper atomizing temperature by the boiler water in a safety-type oil preheater. (The electric preheater on the boiler must provide additional heat to the oil if boiler water temperature is not maintained above 200°F.)

Note: If the operating water temperature going to the system must be lower than 170 °F, the operating boiler water temperature should be a minimum of 170 °F (200 °F if used to preheat No. 6 oil) and mixing valves should be used to avoid damage to the equipment.

Rapid Replacement of Boiler Water - The system layout and controls should be arranged to prevent the possibility of pumping large quantities of cold water into a hot boiler, which will cause shock or thermal stresses. Water temperature in a boiler of 200°F or 240°F cannot be completely replaced with 80°F water in a few minutes time without causing thermal stress. The same fact applies to periods of normal operation, as well as during initial start-up.

Note: The circulating pumps should be interlocked with the burner so that the burner cannot operate unless the circulating pump is running in order to avoid damage to the equipment.

When individual zone circulating pumps are used, it is recommended that they be kept running-even though the heat users do not require hot water. The relief device or by-pass valve will thus allow continuous circulation through the boiler and can help prevent rapid replacement of boiler water with cold zone water.

Continuous Flow Through the Boiler - The system should be piped and the controls arranged to allow water circulation through the boiler under all operating conditions. The operation of three-way valves and system controls should be checked to be sure that the boiler will not be by-passed. Constant circulation through the boiler eliminates the possibility of stratification within the unit and results in more even water temperatures to the system.

A rule of thumb of 3/4 to 1 gpm per boiler horsepower can be used to determine the minimum continuous flow rate through the boiler under all operating conditions. The operator should determine that a flow of water exists through the boiler before initial firing or refiring after boiler has been drained.

Water Circulation

The chart in Figure 3-1 shows the maximum gpm circulation rate of boiler water in relation to full boiler output and system temperature drop.

Multiple Boiler Installations - When multiple boilers are used, care must be taken to ensure adequate or proportional flow through the boilers. Proportional flow can best be accomplished by use of balancing valves and gauges in the supply line from each boiler. If balancing valves or orifice plates are used, a significant pressure drop (e.g., 3-5 psi) must be taken across the balancing device to accomplish the purpose.

If care is not taken to ensure adequate or proportional flow through the boilers, wide variations in firing rates between the boilers can result.

In extreme cases, one boiler may be in the high-fire position while the other boiler or boilers may be at low fire. The net result would be that the common header water temperature to the system would not be up to the desired point.

Pump Location - It is recommended that the system circulating pumps take suction from the outlet connection on the boiler, and that they discharge to the system load. In order to put the boiler and the expansion tank on the suction side of the pump. The suction side is preferred because it decreases air entry into the system and does not impose the system head on the boiler.

It is common practice to install a standby system circulating pump. The main circulating pumps are usually located adjacent to the boilers in the boiler room.

Pump Operation - Pumps are normally started and stopped by manual switches. It is also desirable to interlock the pump with the burner so that the burner cannot operate unless the circulating pump is running.

Pressure

The design of the system and usage requirements often dictate the pressure exerted upon the boiler. Some systems are pressurized with air, or with an inert gas such as nitrogen. Caution must be exercised to ensure that the proper relationship of pressure-to-temperature exists within the boiler so that all of the boiler's internal surfaces are fully wetted at all times. For this reason, the internal boiler pressure, as indicated on the water pressure gauge, must be held to the level shown in Figure 3-3.

When initially firing a newly installed boiler, or when cutting an existing boiler into an operating system, the boiler or boilers to be cut into operation MUST be pressurized equal to the system and/or other boilers prior to opening the header valves.

It is advisable to have a thermometer installed in the return line to indicate return water temperature. Knowing the supply water temperature, the boiler system differential can be established. With knowledge of the pumping rate, the operator can easily detect any excessive load condition and take appropriate corrective action.

Special caution must be taken to guard against any condition, or combination of conditions, that might lead to the transfer of cold water to a hot boiler or hot water to a cold boiler. It cannot be over-emphasized that rapid changes in temperature within the boiler can, and sometimes do, cause damage.

BOILER SIZE (BHP)	BOILER OUT-PUT (1000) BTU/HR	SYSTEM TEMPERATURE DROP - DEGREES °F									
		10	20	30	40	50	60	70	80	90	100
		MAXIMUM CIRCULATING RATE - GPM									
15	500	100	50	33	25	20	17	14	12	11	10
20	670	134	67	45	33	27	22	19	17	15	13
30	1,005	200	100	67	50	40	33	29	25	22	20
40	1,340	268	134	89	67	54	45	38	33	30	27
50	1,675	335	168	112	84	67	56	48	42	37	33
60	2,010	402	201	134	101	80	67	58	50	45	40
70	2,345	470	235	157	118	94	78	67	59	52	47
80	2,680	536	268	179	134	107	90	77	67	60	54
100	3,350	670	335	223	168	134	112	96	84	75	67
125	4,185	836	418	279	209	168	140	120	105	93	84
150	5,025	1,005	503	335	251	201	168	144	126	112	100
200	6,695	1,340	670	447	335	268	224	192	168	149	134
250	8,370	1,675	838	558	419	335	280	240	210	186	167
300	10,045	2,010	1,005	670	503	402	335	287	251	223	201
350	11,720	2,350	1,175	784	587	470	392	336	294	261	235
400	13,400	2,680	1,340	895	670	535	447	383	335	298	268
500	16,740	3,350	1,675	1,120	838	670	558	479	419	372	335
600	20,080	4,020	2,010	1,340	1,005	805	670	575	502	448	402
700	23,430	4,690	2,345	1,565	1,175	940	785	670	585	520	470
800	26,780	5,360	2,680	1,785	1,340	1,075	895	765	670	595	535

Figure: 3-1 Maximum Circulating Rate

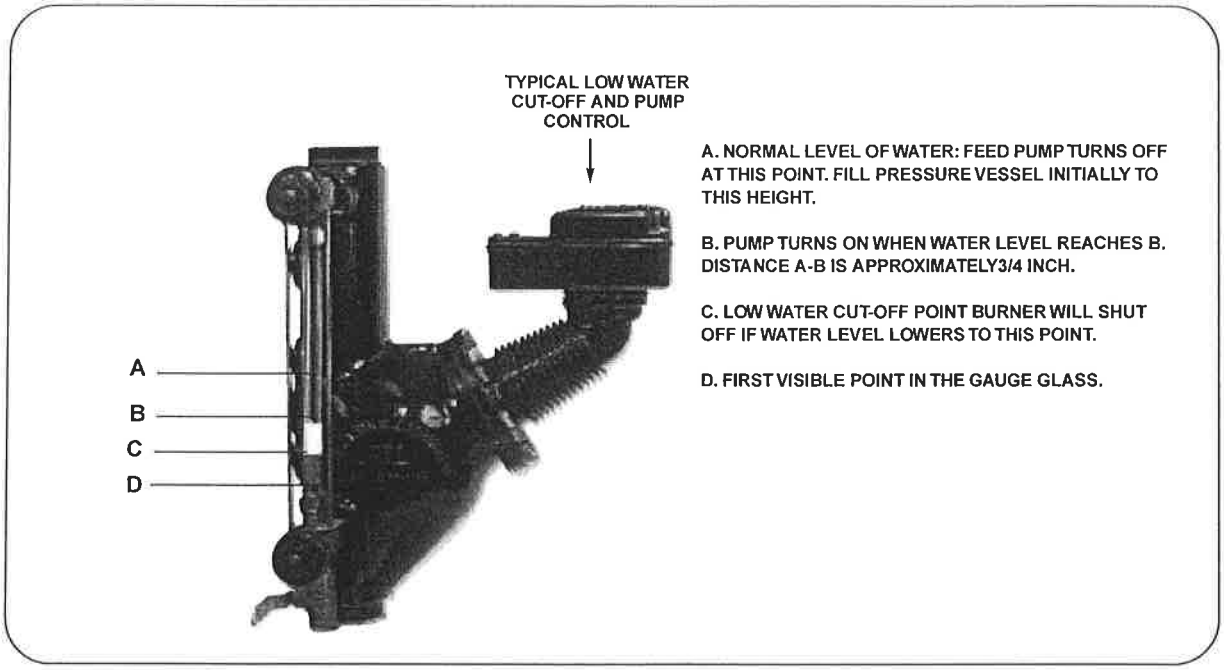

Figure: 3-2 Low Water Cut Off Sight Gauge

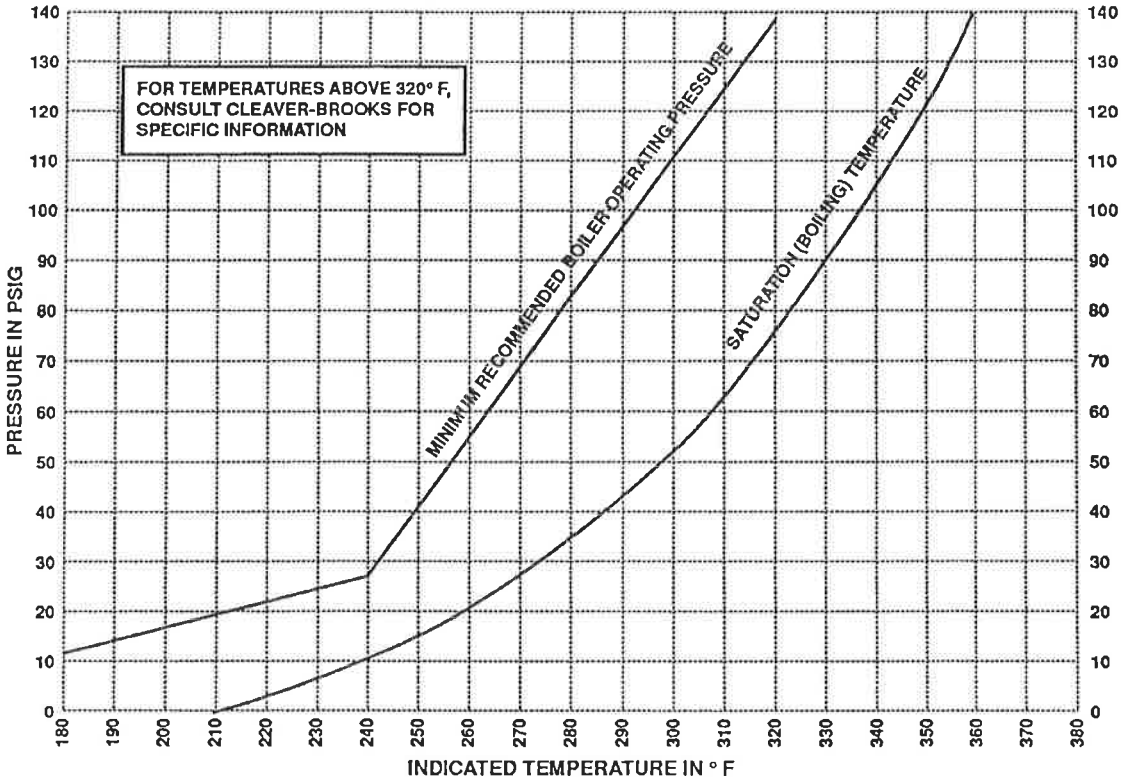

Figure: 3-3 Internal Boiler Pressure

2. STEAM BOILER

Feed Pump Operation

BEFORE turning on the pump motor be certain that all valves in the water feed line are open to prevent possible damage to the feed pump mechanism. After opening the valves, momentarily energize the feed pump motor to establish correct pump rotation. With the correct rotation established, close the boiler feed pump entrance switch. The pump should shut down when the water level reaches the proper level shown in Figure 3-2.

Feedwater pumps must have adequate capacity to maintain required water level under all operating conditions. Check the feedwater pumps periodically and maintain as necessary to prevent unexpected breakdowns.

Note: Prior to operating the pump, carefully check the alignment of the flexible coupling, if one is used. A properly aligned coupling will last a long time and provide trouble-free mechanical operation.

Water Feeder (optional) Operation

Water feeder operation is usually applicable to boilers operating at 15 psi steam or less. It is only necessary to open the water supply line valve and the water feeder discharge valve.

Note: In the event that water column isolation valves are provided or installed, it must be established that the valves are open and seated or locked in the open position. If the valves are installed, it is illegal to operate the boiler with closed or unsealed open valves.

⚠WARNING

The isolation valves and the water column piping must be locked open during operation. Failure to do so may result in a low water condition. Failure to follow these instructions could result in serious personal injury or death

C. WATER TREATMENT

Properly treated boiler feed water, coupled with good engineering and operating practices, lead to maximum effectiveness and long trouble-free life of pressure vessels, at the lowest operating cost. Contact your local Cleaver-Brooks authorized representative for information on how to prevent the presence of unwanted solids and corrosive gases.

Objectives of water treatment in general are:

(1) Prevent hard scale deposits or soft sludge deposits, which reduce heat transfer and can lead to overheated metal and costly downtime and repairs.

(2) Eliminate corrosive gases in the supply or boiler water.

(3) Prevent intercrystalline cracking or caustic embrittlement of boiler metal.

(4) Prevent carryover and foaming.

Accomplishment of the above objectives generally requires proper feedwater treatment before and after introduction of the water into the boiler. The selection of pre-treatment processes depends upon the water source, its chemical characteristics, amount of makeup water needed, plant operating practices, etc. Treating methods include filtering, softening, de-mineralizing, deaerating, and preheating. After-treatment involves chemical treatment of the boiler water.

Because of the variables involved, no single boiler compound can be considered a "cure-all" nor is it advisable to experiment with homemade treating methods. Sound recommendations and their employment should be augmented by a periodic analysis of the feedwater, boiler water, and condensate.

The internal or waterside surfaces of the pressure vessel should be inspected with enough frequency to determine the presence of any contamination, accumulations of foreign matter, or corrosion, and/or pitting. If any of the conditions are detected, contact your local Cleaver-Brooks authorized representative for advice on corrective action.

A properly sized water meter should be installed in the raw water make-up line in order to accurately determine the amount of raw water admitted to the boiler (steam or hot water) and to aid in maintaining proper waterside conditions.

D. CLEANING

1. HOT WATER AND STEAM PIPING

Steam and water piping systems connected to the boiler may contain oil, grease, or foreign matter. The impurities must be removed in order to prevent damage to pressure vessel heating surfaces. On a steam system, the condensate should be wasted until tests show the elimination of undesirable impurities. During the period that condensate is wasted, attention must be given to the treatment of the raw water used as make-up so that an accumulation of unwanted materials or corrosion does not occur. For more information, contact your local Cleaver-Brooks authorized representative.

On a hot water system, chemical cleaning is generally necessary and the entire system should be drained after treatment. Consult your local Cleaver-Brooks authorized representative for recommendations, cleaning compounds, and application procedures.

2. PRESSURE VESSEL

The waterside of the pressure vessel must be kept clean from grease, sludge, and foreign material. Such deposits, if present, will shorten the life of the pressure vessel, will interfere with efficient operation and functioning of control of safety devices, and quite possibly cause unnecessary and expensive re-work, repairs, and down-time.

The installation and operating conditions that the boiler will be subjected to should be considered and cleaning of the waterside of the pressure vessel should be provided during the course of initial start-up.

The pressure vessel and the steam and return lines or hot water piping represent, in effect, a closed system. Although the steam and return (condensate) lines or the hot water piping system may have been previously cleaned, it is possible that:

(1) Cleaning has been inadequate.

(2) Partial or total old system is involved.

(3) Conditions may prevent adequate cleaning of piping.

The pressure vessel waterside should be inspected on a periodic basis. An inspection will reveal true internal conditions and serve as a check against conditions indicated by chemical analysis of the boiler water. Inspection should be made three months after initial starting and at regular 6-, 9-, or 12-month intervals thereafter. The frequency of further periodic inspections will depend upon the internal conditions found.

If any unwanted conditions are observed, contact your local Cleaver-Brooks authorized representative for recommendations.

Any sludge, mud or sediment found will need to be flushed out. If excessive mud of sludge is noticed during the blowdown the scheduling or frequency of blowdown may need to be revised. The need for periodic draining or washout will also be indicated.

Any oil or grease present on the heating surfaces should be removed promptly by a boil-out with an alkaline detergent solution.

Note: Temperature of initial fill of water for hydrostatic tests, boil-out, or for normal operation should be as stated in the ASME Boiler Code.

E. BOIL-OUT OF A NEW UNIT

The internal surfaces of a newly installed boiler may have oil, grease or other protective coatings used in manufacturing. Such coatings must be removed because they lower the heat transfer rate and could cause over-heating of a tube. Before boiling out procedures may begin, the burner should be ready for firing. The operator must be familiar with the procedure outlined under burner operation.

⚠WARNING

Use of a suitable face mask, goggles, rubber gloves, and protective garments must be worn when handling or mixing caustic chemicals. Do not permit the dry material or the concentrated solution to come in contact with skin or clothing. Failure to follow these instructions could result in serious personal injury or death

Your local Cleaver-Brooks authorized representative will be able to recommend a cleaning or boil-out procedure. In the event such service is unavailable or is yet unscheduled, the following information may be of assistance.

There are several chemicals suitable for boil-out. One combination often used is soda ash (sodium carbonate) and caustic soda (sodium hydroxide) at the rate of 3 to 5 pounds each per 1,000 pounds of water, along with a small amount of laundry detergent added as a wetting agent.

The suggested general procedure for cleaning a boiler is as follows:

(1) Refer to Figure 3-4 to determine water capacity. Have sufficient cleaning material on hand to complete the job.

(2) When dissolving chemicals, the following procedure is suggested. Warm water should be put into a suitable container. Slowly introduce the dry chemical into the water, stirring it at all times until the chemical is completely dissolved. Add the chemical slowly and in small amounts to prevent excessive heat and turbulence.

(3) An over-flow pipe should be attached to one of the top boiler openings and routed to a safe point of discharge. A relief or safety valve tapping is usually used.

(4) Water relief valves and steam safety valves must be removed before adding the boil-out solution so that neither it nor the grease which it may carry will contaminate the valves. Use care in removing and reinstalling the valves.

Refer to Chapter 8, Section M for valve installation instructions.

GENERATOR SIZES CB & CB-LE	WATER – GALLONS		WATER – WEIGHT	
	NORMAL	FLOODED	NORMAL	FLOODED
125 HP	689	920	5750	7670
150 HP	869	1115	7250	9295
200 HP	1034	1335	8625	11130

Figure: 3-4 Water Capacity and Weights

(5) All valves in the piping leading to or from the system must be closed to prevent the cleaning solution from getting into the system.

(6) Fill the pressure vessel with clean water until the top of the tubes are covered. Add the cleaning solution and then fill to the top. The temperature of the water used in the initial fill should be at ambient temperature.

(7) The boiler should then be fired intermittently at a low rate sufficient to hold solution just at the boiling point. Boil the water for at least five hours. Do not produce steam pressure.

(8) Allow a small amount of fresh water to enter the boiler to create a slight overflow that will carry off surface impurities.

(9) Continue the boil and overflow process until the water clears. Shut the burner down.

(10) Let the boiler cool to 120°F or less.

⚠WARNING

Be sure to drain the hot water to a safe point of discharge to avoid scalding.Failure to follow these instructions could result in serious personal injury or death

(11) Remove handhole plates and wash the waterside surfaces thoroughly using a high pressure water stream.

(12) Inspect the surfaces. If they are not clean, repeat the boil out.

(13) After closing the handholes and reinstalling the safety or relief valves, fill the boiler and fire it until the water is heated to at least 180°F to drive off any dissolved gases, which might otherwise corrode the metal.

The above procedure may be omitted in the case of a unit previously used or known to be internally clean. However, consideration must be given to the possibility of contaminating materials entering the boiler from the system.

On a steam system, the condensate should be wasted until tests show the elimination of undesirable impurities. During the period that condensate is wasted, be sure make-up water is treated to prevent an accumulation of unwanted materials or corrosion.

On a hot water system, chemical cleaning is generally necessary and the entire system should be drained after treatment. Consult your local Cleaver-Brooks authorized representative for recommendations, cleaning compounds, and application procedures.

F. WASHING OUT

1. HOT WATER BOILER

In theory, a hot water system and boiler that has been initially cleaned, filled with raw water (and water treated), and with no make-up water added, will require no further cleaning or treatment. However, since the system (new or old) can allow entrance of air and unnoticed or undetected leakage of water, introductions of raw water make-up or air may lead to pitting, corrosion and formation of sludge, sediment, scale, etc., on the pressure vessel waterside.

If the operator is absolutely certain that the system is tight, then an annual waterside inspection may be sufficient. However, if there is any doubt, the pressure vessel waterside should be inspected no later than three months after initially placing the boiler into operation, and periodically thereafter as indicated by conditions observed during inspections.

2. STEAM BOILER

No later than three months after initially placing the boiler into operation and starting service, and thereafter as conditions warrant, the pressure vessel should be drained after being properly cooled to near ambient temperature. Handhole covers should be removed and waterside surfaces should be inspected for corrosion, pitting, or formation of deposits.

Flushing of Pressure Vessel Interior

Upon completion of the inspection, the pressure vessel interior should be flushed out, as required, with a high pressure hose. If deposits are not fully removed by flushing, a consultation may be required with your local Cleaver-Brooks authorized representative. In extreme cases, it may be necessary to resort to acid cleaning. Professional advice is recommended if acid cleaning is required.

The inspections will indicate the effectiveness of the feedwater treatment. The effectiveness of treatment, the water conditions, and the amount of fresh water make-up required are all factors to be considered in establishing frequency of future pressure vessel washouts. Contact your local Cleaver-brooks authorized representative for more information.

G. BLOWDOWN STEAM BOILER

Boiler water blowdown is the removal of some of the concentrated water from the pressure vessel and its replacement with feedwater so that the lowering of the concentration of solids in the boiler water occurs.

Solids are brought in by the feedwater even though the water is treated prior to use through external processes that are designed to remove unwanted substances which contribute to scale and deposit formations. However, none of the processes can remove all substances. Regardless of their high efficiency, some solids will be present in the boiler feedwater.

Solids become less soluble in the high temperature of the boiler water and tend to accumulate on heating surfaces. Therefore blowdown and internal chemical treatment are required to prevent the solids from forming harmful scale and sludge.

Scale has a low heat transfer value and acts as an insulation barrier. Scale retards heat transfer, which not only results in lower operating efficiency, and consequently higher fuel consumption, but more importantly, can cause overheating of boiler metal. Over heating of boiler metal can result in tube failures or other pressure vessel metal damage and lead to boiler down-time and costly repairs.

Scale is caused primarily by calcium and magnesium salts, silica and oil. Any calcium and magnesium salts in the boiler water are generally precipitated by the use of sodium phosphate, along with organic materials, to maintain the precipitates or "sludge" in a fluid form. The solids such as sodium salts and suspended dirt do not readily form scale. But as the boiler water boils off as relatively pure steam, the remaining water is thickened with the solids. If the concentration is permitted to accumulate, foaming and priming will occur and the sludge can cause harmful deposits that bring about overheating of the metal.

The lowering or removal of the concentration requires the use of boiler water blowdown.

1. TYPES OF BLOWDOWN

There are two principal types of blowdown: intermittent manual blowdown, and continuous blowdown.

Intermittent Manual Blowdown

Manual or sludge blowdown is necessary for the operation of the boiler regardless of whether or not continuous blowdown is employed.

The blowdown tappings are located at the bottom or lowest part of the boiler in order to lower the dissolved solids in the pressure vessel water, and to remove a portion of the sludge that accumulates in the lower part of the vessel.

Equipment generally consists of a quick opening valve and a shut-off valve. The valves and necessary piping are not normally furnished with the boiler, but supplied by others. All piping must be to a safe point of discharge. Piping must be properly supported and free to expand.

Continuous Blowdown

Continuous blowdown is used in conjunction with a surface blow-off tapping and is the continuous removal of concentrated water.

The surface blow-off opening, when furnished, is on the top center line of the pressure vessel. It is provided with an internal collecting pipe terminating slightly below the working water level for the purpose of skimming surface sediment, oil or other impurities from the surface of the pressure vessel water.

A controlled-orifice valve is used to allow a continual, yet controlled, flow of concentrated water.

Periodic adjustments are made to the valve setting to increase or decrease the amount of blowdown in accordance with the test analysis.

The flow control valve and piping are generally provided by others. All piping must be to a safe point of discharge.

Frequency of Manual Blowdown

When continuous blowdown is utilized, manual blowdown is primarily used to remove suspended solids or sludge. The continuous blowdown removes sediment and oil from the surface of the water along with a prescribed amount of dissolved solids.

When surface or continuous blowdown is not utilized, manual blowdown is used to control the dissolved or suspended solids in addition to the sludge.

In practice, the valve(s) of the bottom blowdown are opened periodically in accordance with an operating schedule and/or chemical control tests. From the standpoint of control, economy and results, frequent short blows are preferred to infrequent lengthy blows. The length and frequency of the blwdown is particularly important when the suspended solids content of the water is high. With the use of frequent short blows a more uniform concentration of the pressure vessel water is maintained.

In cases where the feedwater is exceptionally pure, or where there is a high percentage of return condensate, blowdown may be employed less frequently since less sludge accumulates in the pressure vessel. When dissolved and/or suspended solids approach or exceed predetermined limits, manual blowdown to lower the concentrations is required.

It is generally recommended that a steam boiler be blown down at least once in every eight-hour period, but frequency may vary depending upon water and operating conditions. The blowdown amounts and schedule should be recommended by your local Cleaver-Brooks authorized representative.

A hot water boiler does not normally include openings for surface blowdown and bottom blowdown since blowdowns are seldom practiced. The need remains to be alert to system water losses and corresponding amount of raw water make-up. A water meter is recommended for water make-up lines.

Manual Blowdown Procedure

Blowdown is most effective at a point in time when the generation of steam is at the lowest rate and feedwater input is also low, thus providing a minimum dilution of the boiler water with low concentration feedwater.

Be sure the blow-off piping and tank, if used, are in proper operating condition. Discharge vents should be clear of obstruction, and the waste should be piped to a point of safe discharge.

Most blow-off lines are provided with two valves, generally a quick opening valve nearest the boiler and a slow opening globe type valve downstream. Valves will vary depending upon pressure involved and make or manufacturer. If seatless valves are installed, follow the manufacturer's recommendations.

If a quick opening valve and globe type of slow opening valve are in combination, the former is normally opened first and closed last with blow down accomplished with the globe or slow opening valve.

When opening the second or downstream valve, crack it slightly to allow the lines to warm, then continue opening slowly.

⚠ CAUTION

Do not pump the lever action valve open and closed, as water hammer is apt to break the valve bodies or pipe fittings. Failure to follow these instructions could cause damage to the equipment.

The length of each blow should be determined by actual water analysis. Lowering the water in the gauge glass approximately 1/2" is often acceptable as a guide to adequate blow. However, lowering the water 1/2" should not be interpreted as a rule since water analysis procedures should prevail. If the glass cannot be viewed by the party operating the valve, another operator should watch the glass and direct the valve operator.

Close the downstream (slow opening) valve first and as fast as possible. Then close the valve next to the boiler. Slightly crack the downstream valve and then close it tightly.

Under no circumstances should a blow-off valve be left open and the operator should never leave until the blowdown operation is completed and the valves are closed.

H. PERIODIC INSPECTION

Insurance regulations or local laws will require a periodic inspection of the pressure vessel by an authorized inspector. Sufficient notice is generally given to permit removal of the boiler from service and preparation for inspection.

⚠ WARNING

To avoid the hazard of electrical shock, use a low voltage flashlight during an internal inspection. Preferably, inspectors should work in pairs. Failure to follow these instructions could result in serious personal injury or death.

When shutting down the boiler, the load should be reduced gradually and the pressure vessel cooled at a rate that avoids damaging temperature differential that can cause harmful stresses. Vessels should not normally be drained until all pressure is relieved - again to prevent uneven contraction and temperature differentials that can cause expanded tubes to leak. Draining the unit too quickly may cause the baking of deposits that may be present on the heating surfaces. Some heat, however, may be desirable to dry out the interior of the boiler.

If the internal inspection is being made at the request of an authorized inspector, it is well to ask the inspector observe the conditions prior to cleaning or flushing of waterside surfaces.

Be certain that a supply of manhole and handhole gaskets is available, along with any other gaskets or items needed to place the unit back into operation after inspection.

Have available information on the boiler design, dimensions, generating capacity, operating pressure or temperature, time in service, defects found previously, and any repairs or modifications. Also have available for reference records of previous inspections.

Be prepared to perform any testing required by the inspector including a hydrostatic test.

After proper cooling and draining of the vessel, flush out the waterside with a high pressure water hose. Remove any scale or deposits from the waterside surfaces and check for internal or external corrosion and leakage.

The fireside surface should also be thoroughly cleaned so that metal surfaces, welds, joints, tube ends, fittings and any previous repairs can be readily checked.

Be sure that steam valves, and valves to expansion tank (hot water), feedwater valves, blow-off valves, all fuel valves, valves to expansion tank, and electrical switches are shut off prior to opening handholes, manhole and front or rear doors. Adequately vent the pressure vessel prior to entry.

Clean out the low-water cutoff piping, the water level controls and cross-connecting pipes. Replace the water gauge glass and clean out the water cocks. Also check and clean the drain and the blowdown valves and piping.

Check all water and steam piping and valves for leaks, wear, corrosion, and other damage. Replace or repair as required.

I. PREPARATION FOR EXTENDED LAY-UP

Many boilers used for heating or seasonal loads or for stand-by service may have extended periods of non-use. Special attention must be given to idle boilers so that neither waterside nor fireside surfaces are allowed to deteriorate from corrosion.

Too many conditions exist to lay down definite rules. There are two methods of storage: wet or dry. Your local Cleaver-Brooks authorized representative can recommend the better

method depending upon circumstances in the particular installation.

Whichever method is used, common sense dictates a periodic recheck of fireside and waterside conditions during lay-up to allow variations from the above methods for special area or job-site conditions.

Swing open the boiler head at the stack end of the unit to prevent flow of warm, moist air through the boiler tubes.

Although pollution control regulations may continue to limit the permissible sulphur content of fuel oils, care must be taken to avoid corrosion problems that sulphur can cause, especially in a boiler that is seasonally shut town. Dormant periods, and even frequent shutdowns, expose the fireside surfaces to condensation below the dew point during cooling. Moisture and any sulphur residue can form an acid solution. Under certain conditions, and especially in areas with high humidity, the corrosive effect of the acid will be serious enough to eat through or severely damage boiler tubes or other metal heating surfaces during the time that a boiler is out of service.

The condition does not generally occur during normal firing operation, because the high temperature of operation vaporizes any condensation. However, proper boiler operation must be maintained, especially with a hot water boiler, to prevent the flue gases from falling below the dew point.

At the start of lay-up, thoroughly clean the fireside by removing any soot or other products of combustion from the tubes, tube sheets and other fireside surfaces. Brushing will generally suffice. Sweep away or vacuum any accumulation. The fireside surfaces may be flushed with water. However, all moisture must be eliminated after flushing and the surface dried by blowing air or applying some form of heat. It is good practice to protect the cleaned surfaces by coating them with an anti-corrosive material to prevent rust.

To prevent condensation from forming in the control cabinet, keep the control circuit energized. For extended lay-up periods, especially where high humidity or large swings in ambient temperature occur, the program relay should be removed and stored in a dry atmosphere.

Dry storage is generally employed when the boiler will be out of service for a significant period of time, or where freezing temperatures may exist. In the dry storage method the boiler must be thoroughly dried because any moisture would cause corrosion. Both fireside and waterside surfaces must be cleaned of all scale, deposits, soot, etc. Steps must be taken to eliminate moisture by placing moisture-absorbing materials such as quick lime (at 2 pounds for 3 cubic feet of volume) or silica gel (at 5 pounds for 30 cubic feet of volume) on trays inside the vessel. Fireside surfaces may be coated with an anti-corrosive material, or grease or tar paint. Refractories should be brushed clean and wash-coated. All openings to the pressure vessel, such as manhole and handholes, should be shut tightly. Feedwater and steam valves should be closed. Damper and vents should be closed to prevent air from reaching fireside surfaces. Periodic inspection should be made and absorption materials renewed.

Wet storage is generally used for a boiler held in stand-by condition or in cases where dry storage is not practical. The possibility of freezing temperatures must be considered. Care must again be taken to protect metal surfaces. Variables preclude definite recommendations. However, it is suggested that the pressure vessel be drained, thoroughly cleaned internally, and re-filled to overflowing with treated water. If deaerated water is not available, the unit should be fired to boil the water for a short period of time. Additional chemicals may be suggested by your local Cleaver-Brooks authorized representative to minimize corrosion. Internal water pressure should be maintained at greater than atmospheric pressure. Nitrogen is often used to pressurize the vessel. Fireside surfaces must be thoroughly cleaned and refractory should be wash-coated.

CHAPTER 4

SEQUENCE OF OPERATION

A. General 4-1
B. Circuit And Interlock Controls 4-1
C. Sequence Of Operation - Oil Or Gas.....4-2
D. Flame Loss Sequence 4-3

A. GENERAL

Chapter 4 outlines the electrical sequencing of various controls through the pre-purge, ignition, run, and shutdown cycles of the burner.

The program relay establishes the sequence of operation and directs the operation of all other controls and components to provide an overall operating sequence.

Note: The make or model of the program relay provided will vary depending upon job specifications. The following sequence applies regardless of the make or model. Please refer to the Wiring Diagram (WD) prepared by Cleaver-Brooks for your specific installation.

Abbreviations for the various electrical components are listed in Figure 4-1. The sequences outlined in Chapter 4 employ specific nomenclature to aid in applying the text to the wiring diagram.

The burner and control system are in starting condition when the following conditions exist:

- Boiler water is up to the correct level, closing the low-water cutoff switch.
- The low-water light (panel) is off.
- The operating limit pressure control (steam boiler) or the operating limit temperature control (hot water boiler) and high limit pressure or temperature control are below their cutoff setting.
- All applicable limits are correct for burner operation.
- The load demand light glows.

All entrance switches are closed and power is present at the line terminals of:

- Blower motor starter
- Air compressor motor starter (if provided)
- Oil heater relay (if provided)
- Oil pump motor starter (if provided).

The sequences do not attempt to correlate the action of the fuel supply system or feedwater system except for the interlock controls that directly relate to the action of the program relay. Chapters 6 and 7 contain operating instructions and specific information on setting and adjusting the controls.

B. CIRCUIT AND INTERLOCK CONTROLS

The burner control circuit is a two-wire system designed for 115 Vac, 60 Hz, single-phase power.

The electrical portion of the boiler is made up of individual circuits with controls that are wired in a manner designed to provide a safe workable system. The program relay provides connection points for the interconnection of the various circuits.

The controls used vary depending upon the fuel oil or gas and the specific requirement of applicable regulatory bodies. Refer to the boiler wiring diagram to determine the actual controls provided. The circuits and controls normally used in the circuits follow and are referred to in the following sequence of operation.

Limit Circuit:

- Burner switch (BS)
- Operating limit control (OLC) - pressure or temperature
- High limit control (HLC) - pressure or temperature
- Low-water cutoff (LWCO)
- Gas-oil selector switch (GOS) - (Combination burner only)
- Oil drawer switch (ODS)-Oil burner
- Low oil temperature switch (LOTS) - (Nos. 4, 5 and 6 oil only)
- Low gas pressures switch (LGPS)
- High gas pressure switch (HGPS)
- LE Proximity switch interlock

- Fuel valve interlock circuit
- Main gas valve auxiliary switch (MGVAS)
- Oil valve auxiliary switch (OVAS)

Blower Motor Starter Circuit

- Blower motor starter (BMS)
- Air compressor motor starter (ACMS) (if provided)
- Air purge valve (APV) (Nos. 5 or 6 oil only)

Running Interlock Circuit

- Blower motor starter interlock (BMSI)
- Combustion air proving switch (CAPS)
- Atomizing air proving switch (AAPS) (if provided)

Low Fire Proving Circuit

- Low fire switch (LFS)

Pilot Ignition Circuit

- Gas pilot valve (GPV)
- Ignition transformer (IT)
- Gas pilot vent valve (GPVV) (if provided)

Flame Detector Circuit

- Flame detector (FD)
- Main fuel valve circuit
- Main gas valve (MGV)
- Main gas vent valve (MGVV) (if provided)
- Oil valve (OV)
- Main fuel valve light (FVL)

Firing Rate Circuit

- Damper motor transformer (DMT)
- Modulating damper motor (MDM)
- Manual-automatic switch (MAS)
- Manual flame control (MFC)
- Modulating control (MC)

To comply with requirements of insurance underwriters such as Factory Mutual (FM), Industrial Risk Insurers (IRI) or others, additional interlock devices may be used in addition to the circuits mentioned in section B.

High Fire Proving Circuit

- High fire switch (HFS)

Running Interlock and Limit Circuit

- Low oil pressure switch (LOPS)
- High oil pressure switch (HOPS)
- High oil temperature switch (HOTS)
- Auxiliary low-water cutoff (ALWCO)

C. SEQUENCE OF OPERATION - OIL OR GAS

On a combination fuel unit, the gas/oil switch must be set for the proper fuel.

The following sequence occurs with power present at the program relay (PR) input terminals and with all other operating conditions satisfied.

Pre-Purge Cycle - When the burner switch (BS) is turned "on," and controls wired in the "limit" and "fuel valve interlock" circuits are closed and no flame signal is present, the "blower motor start circuit" is powered energizing the blower motor starter (BMS). The load demand light (LDL) turns on. When firing oil, the air compressor motor starter (ACMS) (if provided) is also powered. Air purge valve (APV) (Nos. 5 and 6 oil only) remains deenergized.

At the same time, the program relay signals the modulating damper motor (MDM) to open the air damper. The damper begins to open and drives to its full open or high fire position. Opening the damper motor allows a flow of purging air through the boiler prior to the ignition cycle.

On certain boilers the circuitry will include a high fire switch (HFS). The purpose of the switch is to prove that the modulating damper motor (MDM) has driven the damper to the open position during the pre-purge cycle. In this instance, the "high fire proving circuit" is utilized.

The controls wired into the "running interlock circuit" must be closed within 10 seconds after the start sequence. In the event any of the controls are not closed at this time, or if they subsequently open, the program relay will go into a safety shutdown.

At the completion of the high fire purge period, the program relay signals the modulating damper motor (MDM) to drive the air damper to its low fire position.

To assure that the system is in low fire position prior to ignition, the low fire switch (LFS) must be closed to complete the "low fire proving circuit." The sequence will stop and hold until the modulating damper motor (MDM) has returned to the low fire position and the contacts of the low fire switch (LFS) are closed. Once the low fire switch is closed, the sequence is allowed to continue.

Note: The ignition trial cannot be started if flame or a flame simulating condition is sensed during the pre-purge period. A safety shutdown will occur if flame is sensed at this time.

Ignition Cycle - The ignition transformer (IT) and gas pilot valve (GPV) are energized from the appropriate pilot ignition terminal.

Note: An oil-fired burner may be equipped with an oil pilot rather than a gas pilot. The ignition sequence of both is identical.

The pilot flame must be established and proven by the flame detector (FD) within a 10 second period in order for the ignition cycle to continue. If for any reason this does not happen, the system will shut down and safety lockout will occur.

Note: Depending upon the requirements of the regulatory body, insurer or fuel being burned, either the 10 or 15 second pilot ignition terminal may be used. Both provide the same function but differ in time interval allowed for proving main flame ignition. Refer to the boiler wiring diagram.

With a proven pilot, the main fuel valve(s) (OV or MGV) is energized and the main fuel valve light (FVL) in the panel is lighted. The main flame is ignited and the trial period for proving the main flame begins. It lasts 10 seconds for light oil and natural gas, and 15 seconds for heavy oil. At the end of the proving period, if the flame detector still detects main flame, the ignition transformer and pilot valve are deenergized and pilot flame is extinguished.

Note: If the main flame does not light, or stay lit, the fuel valve will close. The safety switch will trip to lock out the control. Refer to flame loss sequence (section D) for description of action.

⚠WARNING

The cause for loss of flame or any other unusual condition should be investigated and corrected before attempting to restart. Failure to follow these instructions could result in serious personal injury or death

Run Cycle - With main flame established, the program relay releases the modulating damper motor (MDM) from its low fire position to control by either the manual flame control (MFC) or the modulating control (MC), depending upon the position of the manual-automatic switch (MAS). This allows operation in ranges above low fire.

With the manual-automatic switch (MAS) set at automatic, subsequent modulated firing will be at the command of the modulating control (MC), which governs the position of the modulating damper motor (MDM). The air damper and fuel valves are actuated by the motor through a linkage and cam assembly to provide modulated firing rates.

Note: Normal operation of the burner should be with the switch in the manual-automatic position and under the direction of the modulating control. The manual position is provided for initial adjustment of the burner over the entire firing range. When a shutdown occurs while operating in the manual position at other than low fire, the damper will not be in a closed position, thus allowing more air than desired to flow through the boiler. Excess air flow subjects the pressure vessel metal and refractory to undesirable conditions. The effectiveness of nozzle purging is lost on a No. 6 oil burner.

The burner starting cycle is now complete. The (LDL) and (FVL) lights on the panel remain lit. Demand firing continues as required by load conditions.

Burner Shudown-Post Purge - The burner will fire until steam pressure or water temperature in excess of demand is generated. With modulated firing, the modulating damper motor (MDM) should return to the low fire position before the operating limit control (OLC) opens. When the limit control circuit is opened, the following sequence occurs:

The main fuel valve circuit is deenergized, causing the main fuel valve (MGV) or (OV) to close. The flame is extinguished. The control panel lights (LDL) and (FVL) are turned off. The blower motor continues to run to force air through the boiler for the post purge period.

On a No. 6 oil burner, the air purge valve (APV) is powered from the blower motor start circuit via the contacts of the air purge relay (APR) to provide an air purge of the oil nozzle. The damper motor returns to the low fire position if it is not already in that position.

The blower motor start circuit is deenergized at the end of the post purge cycle and the shutdown cycle is complete.

The program relay is now ready for subsequent recycling, and when steam pressure or water temperature drops to close the contacts of the operating control, the burner again goes through its normal starting and operating cycle.

D. FLAME LOSS SEQUENCE

The program relay will recycle automatically each time the operating control closes, or after a power failure. It will lockout following a safety shutdown caused by failure to ignite the pilot, or the main flame, or by loss of flame. Lockout will also occur if flame or flame simulating condition occurs during the prepurge period.

The control will prevent start-up or ignition if limit circuit controls or fuel valve interlocks are open. The control will lock out upon any abnormal condition affecting air supervisory controls wired in the running interlock circuit.

⚠WARNING

The lockout switch must be manually reset following a safety shutdown. The cause for loss of flame or any unusual condition should be investigated and corrected before attempting to restart. Failure to follow these instructions could result in serious personal injury or death.

1. **No pilot flame.**

The pilot flame must be ignited and proven within a 10-second period after the ignition cycle begins. If not proven within this period, the main fuel valve circuit will not be powered and the fuel valve(s) will not be energized. The ignition circuit is immediately deenergized and the pilot valve closes, the reset switch lights and lockout occurs immediately.

The blower motor will continue to operate. The flame failure light and the alarm bell (optional) are energized 10 seconds later.

The blower motor will be deenergized. The lockout switch must be manually reset before operation can be resumed. (Refer to the previous caution.)

2. **Pilot but no main flame.**

When the pilot flame is proven, the main fuel valve circuit is energized. Depending upon the length of the trial-for-ignition period, the pilot flame will be extinguished 10 or 15 seconds later. The flame detecting circuit will respond to deenergize the main fuel valve circuit within 2 to 4 seconds to stop the flow of fuel. The reset switch lights and lockout occurs immediately. The blower motor will continue to operate.

The flame failure light and alarm bell (optional) are energized 10 seconds later.

The blower motor will be deenergized. The lockout switch must be manually reset before operation can be resumed. (Refer to the previous caution.)

3. **Loss of flame.**

If a flame outage occurs during normal operation and/or the flame is no longer sensed by the detector, the flame relay will trip within 2 to 4 seconds to deenergize the fuel valve circuit and shut off the fuel flow. The reset switch lights and lockout occurs immediately. The blower motor continues operation. The flame failure light and alarm bell (optional) are energized 10 seconds later.

The blower motor will be deenergized. The lockout switch must be manually reset before operation can be resumed. (Refer to the previous caution.)

If the burner will not start, or upon a safety lockout, the trouble shooting section in the operating manual and the technical bulletin should be referred to for assistance in pinpointing problems that may not be readily apparent.

The program relay has the capability to self-diagnose and to display a code or message that indicates the failure condition. Refer to the control bulletin for specifics and suggested remedies. Familiarity with the program relay and other controls in the system can be obtained by studying the contents of the manual and this bulletin.

Knowledge of the system and its controls will make troubleshooting much easier. Costly down time or delays can be prevented by systematic checks of the actual operation against the normal sequence to determine the stage at which performance deviates from normal. Following a routine may possibly eliminate overlooking an obvious condition, often one that is relatively simple to correct.

Remember, a safety device, for the most part, is doing its job when it shuts down or refuses to operate. Never attempt to circumvent any of the safety features.

Preventive maintenance and scheduled inspection of all components should be followed. Periodic checking of the relay is recommended to see that a safety lockout will occur under conditions of failure to ignite either pilot or main flame, or from loss of flame.

MNEMONIC	DESCRIPTION
	A
A	Amber (Color Of Pilot Light)
AAFL	Atomizing Air Failure Light
AAFR	Atomizing Air Failure Relay
AAPL	Atomizing Air Proven Light
AAPS	Atomizing Air Proving Switch
AAPS-B	Atomizing Air Proving Switch- Burner
AAPS-C	Atomizing Air Proving Switch- Compressor
AASS	Atomizing Air Selector Switch
AB	Alarm Bell
ACCR	Air Compressor Control Relay
ACM	Air Compressor Motor
ACMCB	Air Compressor Motor Circuit Breaker
ACMF	Air Compressor Motor Fuses
ACMS	Air Compressor Motor Starter
ACMSI	Air Compressor Motor Starter Interlock
AH	Alarm Horn
ALFR	Assured Low Fire Relay
ALWCO	Auxiliary Low Water Cutoff
AM	Ammeter
AMS	Atomizing Media Switch
AOV	Auxiliary Oil Valve
APR	Air Purge Relay
APV	Air Purge Valve
AR	Alarm Relay
AS	Auxiliary Switch (Suffix)
ASR	Alarm Silencing Relay
ASS	Alarm Silencing Switch
ASV	Atomizing Steam Valve
AT	Annunciator Transformer
AWCBDS	Auxiliary Water Column Blowdown Switch
	B
B	Blue (Color of Pilot Light)
BC	Bias Control
BDCS	Breeching Damper Closed Switch
BDOS	Breeching Damper Open Switch
BDRS	Blowdown/Reset Switch
BFPL	Boiler Feed Pump Light
BFPM	Boiler Feed Pump Motor
BFPMCB	Boiler Feed Pump Motor Circuit Breaker
BFPMF	Boiler Feed Pump Motor Fuses
BFPMS	Boiler Feed Pump Motor Starter
BFPS	Boiler Feed Pump Switch
BFTS	Back Flow Temperature Switch
BHS	Boiler - Header Switch
BIOL	Boiler in Operation Light
BIOR	Boiler In Operation Relay
BM	Blower Motor
BMCB	Blower Motor Circuit Breaker
BMCR	Blower Motor Control Relay
BMF	Blower Motor Fuses
BMPR	Blower Motor Power Relay
BMPS	Blower Motor Purge Switch
BMR	Blower Motor Relay
BMS	Blower Motor Starter
BMSI	Blower Motor Starter Interlock
BMSS	Boiler Master Selector Switch

MNEMONIC	DESCRIPTION
BS	Burner Switch
BSS	Boiler Selector Switch
BWPM	Booster Water Pump Motor
BWT	Booster Water Thermostat
	C
CAFL	Combustion Air Failure Light
CAFR	Combustion Air Failure Relay
CAP	Capacitor
CAPS	Combustion Air Proving Switch
CCCB	Control Circuit - Circuit Breaker
CCF	Control Circuit Fuse
CCRS	Control Circuit Reset Switch
CCT	Control Circuit Transformer
CIPL	Changeover In Progress Light
CL	Canopy Light
CLS	Canopy Light Switch
COPS	Changeover Pressure Switch
COR	Changeover Relay
COTD	Changeover Time Delay
CPOL	Control Power on Light
CR	Control Relay
CSSS	Control System Selector Switch
CWPM	Circulating Water Pump Motor
CWPMCB	Circulating Water Pump Motor Circuit Breaker
CWPMF	Circulating Water Pump Motor Fuses
CWPMS	Circulating Water Pump Motor Starter
CWPMSI	Circulating Water Pump Motor Starter Interlock
CWPR	Circulating Water Pump Relay
CWPS	Circulating Water Pump Switch
CWSV	Cooling Water Solenoid Valve
	D
D	Denotes Digester Gas Equipment (Prefix)
DCVM	Direct Current Voltmeter
DG	Draft Gauge
DGHPV	Digester Gas Housing Purge Valve
DHWC	Deaerator High Water Control
DHWL	Deaerator High Water Light
DHWR	Deaerator High Water Relay
DISC	Disconnect (Entrance Switch)
DLWC	Deaerator Low Water Control
DLWL	Deaerator Low Water Light
DLWR	Deaerator Low Water Relay
DM	Damper Motor
DMT	Damper Motor Transformer
DNS	Day-Night Switch
DODE	Delay On Deenergization (Timer)
DOE	Delay On Energization (Timer)
DPS	Damper Positioning Switch
DS	Door Switch
	E
EDS	Emergency Door Switch
ESS	Emergency Stop Switch
ETM	Elapsed Time Meter
	F
FADM	Fresh Air Damper Motor
FADR	Fresh Air Damper Relay
FD	Flame Detector

Figure: 4-1 Electrical Nomenclature

MNEMONIC	DESCRIPTION
FDJB	Flame Detector Junction Box
FDPS	Flow Differential Pressure Switch
FFA	Flame Failure Alarm
FFL	Flame Failure Light
FFR	Flame Failure Relay
FGR	Flue Gas Recirculation
FGRCDTD	Flue Gas Recirculation Cool Down Time Delay
FGRCPS	Flue Gas Recirculation Cam Position Switch
FGRFM	Flue Gas Recirculation Fan Motor
FGRFMS	Flue Gas Recirculation Fan Motor Starter
FGRFMSI	Flue Gas Recirculation Fan Motor Starter Interlock
FGRMVLS	Flue Gas Recirculation Manual Valve Limit Switch
FGRTD	Flue Gas Recirculation Time Delay
FORS	First Out Reset Switch
FPM	Feed Pump Motor
FPMS	Feed Pump Motor Starter
FPR	Feed Pump Relay
FPS	Feed Pump Switch
FRI	Firing Rate Interface
FRP	Firing Rate Potentiometer (O2 Trim)
FS	Flow Switch
FSS	Fuel Selector Switch
FSSM	Flame Signal Strength Meter
FVEL	Fuel Valve Energized Light
FVL	Fuel Valve Light
FVR	Fuel Valve Relay
FWC	Feed Water Control
FWVT	Feed Water Valve Transformer
	G
G	Green (Color Of Pilot Light)
GGL	Gauge Glass Light
GOL	Gas Operation Light
GOR	Gas-Oil Relay
GOS	Gas-Oil Switch
GOR	Gas-Oil Relay
GPS	Gas Pressure Sensor
GPV	Gas Pilot Valve
GPVV	Gas Pilot Vent Valve
GR	Gas Relay
GSSV	Gas Sensor Solenoid Valve
GVEL	Gas Valve Energized Light
GVTS	Gas Valve Test Switch
	H
HATC	High Ambient Temperature Control
HBWTC	High Boiler Water Temperature Control
HBWTL	High Boiler Water Temperature Light
HFAV	High Fire Air Valve
HFGV	High Fire Gas Valve
HFL	High Fire Light
HFOV	High Fire Oil Valve
HFPS	High Furnace Pressure Switch
HFS	High Fire Switch
HFS-A	High Fire Switch - Air
HGPL	High Gas Pressure Light
HGPR	High Gas Pressure Relay
HGPS	High Gas Pressure Switch
HHFL	Header High Fire Light

MNEMONIC	DESCRIPTION
H/LWA	High Low Water Alarm
HLC	High Limit Control
HLFC	High-Low Fire Control
HLPC	High Limit Pressure Control
HLTC	High Limit Temperature Control
HMC	Header Modulating Control
HOPL	High Oil Pressure Light
HOPR	High Oil Pressure Relay
HOPS	High Oil Pressure Switch
HOLC	Header Operating Limit Control
HOTL	High Oil Temperature Light
HOTR	High Oil Temperature Relay
HOTS	High Oil Temperature Switch
HPCO	High Pressure Cutoff
HSPC	High Steam Pressure Control
HSPL	High Steam Pressure Light
HSPR	High Steam Pressure Relay
HSTC	High Stack Temperature Control
HSTL	High Stack Temperature Light
HSTS	High Stack Temperature Switch
HWAR	High Water Alarm Relay
HWC	High Water Control
HWCO	High Water Cutoff
HWL	High Water Light
	I
(I.C.)	Instantaneously Closed
(I.O.)	Instantaneously Open
IL	Ignition Light
INT	Interval (Timer)
IR	Ignition Relay
IT	Ignition Transformer
	J
JPP	Jackshaft Position Potentiometer
	L
LAMPS	Low Atomizing Media Pressure Switch
LASPS	Low Atomizing Steam Pressure Switch
LDL	Load Demand Light
LDPS	Low Differential Pressure Switch
LDS	Low Draft Switch
LFAV	Low Fire Air Valve
LFGV	Low Fire Gas Valve
LFHTD	Low Fire Hold Time Delay
LFL	Low Fire Light
LFOV	Low Fire Oil Valve
LFPS	Low Fire Pressure Switch
LFR	Low Fire Relay
LFS	Low Fire Switch
LFS-A	Low Fire Switch - Air
LFS-F	Low Fire Switch - Fuel
LFS-G	Low Fire Switch - Gas
LFS-O	Low Fire Switch - Oil
LFTC	Low Fire Temperature Control
LGPL	Low Gas Pressure Light
LGPR	Low Gas Pressure Relay
LGPS	Low Gas Pressure Switch
LIAPS	Low Instrument Air Pressure Switch
LLPC	Low Limit Pressure Control

Figure: 4-1 Electrical Nomenclature (Continued)

MNEMONIC	DESCRIPTION
LLPR	Low Limit Pressure Relay
LLR	Lead Lag Relay
LLTC	Low Limit Temperature Control
LLTR	Low Limit Temperature Relay
LOPL	Low Oil Pressure Light
LOPR	Low Oil Pressure Relay
LOPS	Low Oil Pressure Switch
LOTL	Low Oil Temperature Light
LOTR	Low Oil Temperature Relay
LOTS	Low Oil Temperature Switch
LPAPS	Low Plant Air Pressure Switch
LPCO	Low Pressure Cutoff
LPS	Low Pressure Switch
LSPAR	Low Steam Pressure Alarm Relay
LSPC	Low Steam Pressure Control
LSPL	Low Steam Pressure Light
LSPR	Low Steam Pressure Relay
LSPS	Low Steam Pressure Switch
LTS	Lamp Test Switch
LWA	Low Water Alarm
LWAR	Low Water Alarm Relay
LWCO	Low Water Cutoff
LWFL	Low Water Flow Light
LWL	Low Water Light
LWR	Low Water Relay
LWRR	Low Water Reset Relay
	M
MA	Milli-amp
MAS	Manual - Automatic Switch
MAM	Micrometer
MC	Modulating Control
MCS	Manual Control Switch
MDM	Modulating Damper Motor
MDMAS	Modulating Damper Motor Auxiliary Switch
MFC	Manual Flame Control (Potentiometer)
MFGRTS	Minimum Flue Gas Recirculation Temperature Switch
MFVL	Main Fuel Valve Light
MFWV	Motorized Feed Water Valve
MGV	Main Gas Valve
MGVAS	Main Gas Valve Auxiliary Switch
MGVEL	Main Gas Valve Energized Light
MGVV	Main Gas Vent Valve
MLC	Modulating Level Control
(MOM)	Momentary
MOV	Main Oil Valve
MOVAS	Main Oil Valve Auxiliary Switch
MOVEL	Main Oil Valve Energized Light
MPC	Modulating Pressure Control
MPCB	Main Power Circuit Breaker
MPP	Manual Positioning Potentiometer
(MR)	Manual Reset
MTC	Modulating Temperature Control
MVA	Make-Up Valve Actuator
	N
N	Denotes Natural Gas Equipment (Prefix)
(N.C.)	Normally Closed
(N.O.)	Normally Open
NFL	No Flow Light

MNEMONIC	DESCRIPTION
NFR	No Flow Relay
NGHPV	Natural Gas Housing Purge Valve
	O
ODA	Outlet Damper Actuator
ODM	Outlet Damper Motor
ODMAS	Outlet Damper Motor Auxiliary Switch
ODMT	Outlet Damper Motor Transformer
ODS	Oil Drawer Switch
OH	Oil Heater
OHCB	Oil Heater Circuit Breaker
OHF	Oil Heater Fuses
OHR	Oil Heater Relay
OHS	Oil Heater Switch
OHT	Oil Heater Thermostat
OLC	Operating Limit Control
OLPC	Operating Limit Pressure Control
OL'S	Thermal Overloads
OLTC	Operating Limit Temperature Control
OMPM	Oil Metering Pump Motor
OMPMF	Oil Metering Pump Motor Fuse
OOL	Oil Operation Light
OPM	Oil Pump Motor
OPMCB	Oil Pump Motor Circuit Breaker
OPMF	Oil Pump Motor Fuses
OPMS	Oil Pump Motor Starter
OPPM	Oil Purge Pump Motor
OPR	Oil Purge Relay
OPRL	Oil Pump Running Light
OPRS	Oil Pressure Sensor
OPS	Oil Pump Switch
OPSPM	Oil Pump Supply Pump Motor
OPV	Oil Purge Valve
OR	Oil Relay
ORV	Oil Return Valve
OSOV	Oil Shutoff Valve
OSPS	O2 Set Point Switch
OSS	Oil Selector Switch
OT	Outdoor Thermostat
OTS	Oil Temperature Sensor
OV	Oil Valve
OVAS	Oil Valve Auxiliary Switch
OVEL	Oil Valve Energized Light
	P
P	Denotes Propane Gas Equipment (Prefix)
PAASV	Plant Air Atomizing Solenoid Valve
PAPS	Purge Air Proving Switch
PC	Pump Control
PCL	Purge Complete Light
PCR	Pump Control Relay
PFCC	Power Factor Correction Capacitor
PFFL	Pilot Flame Failure Light
PFFR	Pilot Flame Failure Relay
PFPS	Positive Furnace Pressure Switch
PHGPS	Pilot High Gas Pressure Switch
PIPL	Purge in Progress Light
PIS	Pilot Ignition Switch
PLC	Programmable Logic Controller
PLGPS	Pilot Low Gas Pressure Switch

Figure: 4-1 Electrical Nomenclature (Continued)

MNEMONIC	DESCRIPTION
POL	Power On Light
POV	Pilot Oil Valve
PPL	Pre-Purging Light
PPR	Post Purge Relay
PPTD	Post Purge Time Delay
PR	Program Relay
PRL	Purge Ready Light
PRPTD	Pre-Purge Time Delay
PR	Program Relay
PRPTD	Per-Purge Time Delay
PS	Power Supply
PSF	Power Supply Fuse
PSS	Pump Selector Switch
PSV	Purge Solenoid Valve
PT	Purge Timer
PTS	Pump Transfer Switch
PUCR	Purge Complete Relay
PUR	Purge Relay
	R
R	Red (Color of Pilot Light)
RAR	Remote Alarm Relay
RATD	Remote Alarm Time Delay
RES	Resistor
RML	Run Mode Light
RMR	Release To Modulate Relay
RS	Range Switch
RSR	Remote Start Relay
RTD	Resistance Temperature Detector
	S
SBFPL	Stand By Feed Pump Light
SBFPM	Stand By Feed Pump Motor
SBFPMCB	Stand By Feed Pump Motor Circuit Breaker
SBFPMF	Stand By Feed Pump Motor Fuses
SBFPMS	Stand By Feed Pump Motor Starter
SBOV	Surface Blow Off Valve
SBPS	Sootblower Pressure Switch
SBR	Sootblower Relay
SC	Scanner
SCTS	Supervisory Cock Test Switch
SDL	Steam Demand Light
SHT	Steam Heater Thermostat
SHV	Steam Heater Valve
SLCL	Safety Limits Complete Light
SPIR	System Pump Interlock Relay
SPS	Steam Pressure Sensor
SS	Selector Switch
SSC	Sequencing Step Controller
SSL	Safety Shutdown Light
SSR	Solid State Relay
SSV	SpanSolenoid Relay
STHWC	Surge Tank High Water Control
STHWL	Surge Tank High Water Light
STHWR	Surge Tank High Water Relay
STLWC	Surge Tank Low Water Control
STLWL	Surge Tank Low Water Light

MNEMONIC	DESCRIPTION
STLWR	Surge Tank Low Water Relay
	T
(T.C.)	Timed Closed
(T.O.)	Timed Open
TB	Terminal Block
T/C	Thermocouple
TC	Time Clock
TCR	Time Clock Relay
TD	Time Delay
TDAS	Time Delay Auxiliary Switch
TFWR	Transistorized Feedwater Relay
TPL	Transfer Pump Light
TPM	Transfer Pump Motor
TPMCB	Transfer Pump Motor Circuit Breaker
TPMF	Transfer Pump Motor Fuses
TPMS	Transfer Pump Motor Starter
TPS	Transfer Pump Switch
	U
UVFD	Ultra-Violet Flame Detector
	V
V	Voltmeter
VDR	Voltage Differential Relay
	W
W	White (Color of Pilot Light)
WC	Water Column
WCBDS	Water Column Blow Down Switch
WF	Water Feeder
WFNL	Water Flow Normal Light
WLC	Water Level Control
WO	Denotes Waste Oil Equipment (Prefix)
WTS	Water Temperature Sensor
	Y
Y	Yellow (Color of Pilot Light)

Figure: 4-1 Electrical Nomenclature (Continued)

CHAPTER 5

STARTING AND OPERATING INSTRUCTIONS

A. General Preparation for Start-up - All Fuels 5-1
B. Control Settings-Steam and Hot Water 5-2
C. Gas Pilot 5-3
D. Atomizing Air 5-3
E. Firing Preparations for No. 2 Oil (Series 100-200) ... 5-4
F. Firing Preparations for No. 6 Oil (Series 400-600) ... 5-6
G. Firing Preparations for Gas (Series 200-400-700) 5-7
H. IFGR Setup and Operation 5-8
I. Start-up, Operating and Shutdown - All Fuels 5-10
J. Control Operational Tests and Checks 5-11

Note: If your boiler is equipped with a CB-HAWK™ boiler management control system, refer to CB-HAWK Installation, Operating and Servicing Manual No. 750-133 for specific information regarding procedures described in section A.

A. GENERAL PREPARATION FOR START-UP, ALL FUELS

Instructions in Chapter 5 are all based upon installation being complete and all electrical, fuel, water and vent stack connections are made.

The operator should be familiar with the burner, boiler, and all controls and components. To quickly locate and identify the various controls and components mentioned in the following paragraphs, refer to the illustrations and the contents of Chapters 1, 2 and 3. Instructions for adjusting major components are given in Chapter 6 this should be reviewed prior to firing. The wiring diagram should also have been studied, along with the firing sequence outlined in Chapter 4.

⚠WARNING

Be sure the starting instructions be read completely until they are thoroughly understood, before attempting to operate the boiler, rather than performing each operation as it is read for the first time. Failure to follow these instructions could result in serious personal injury or death.

Verify supply of fuel and proper voltage. Check for blown fuses, open circuit breakers, dropped out overloads, etc. Check reset of all starters and controls having manual reset features. Check the lockout switch on the programmer and reset if necessary.

The boiler should be filled with water to the proper operating level using water of ambient temperature. Be sure that treated feedwater is available and used. In heating applications, the entire system should be filled and vented. Refer to Chapter 3 for water requirements. On a steam boiler, open the test valve (Figure 1-7) to vent air displaced during filling. Leave the test valve open until the escape of steam is noted after the burner is operating.

⚠WARNING

Prior to firing a boiler, be sure that discharge piping from safety valves or relief valves, and discharge piping from all blowdown and drain valves, is piped to a SAFE point of discharge, so that discharge of hot water or steam cannot possibly cause injury. Failure to follow these instructions could result in serious personal injury or death.

Check all linkage for full and free movement of the damper and metering valves and cams. The check can be done by loosening the linkage at the damper motor connecting arm and manipulating the linkage by hand.

Check for rotation of all motors by momentarily closing the motor starter or relay. **The blower impeller rotation is counter-clockwise for the CB-LE, when viewed from the front of the boiler (see Figure 5-1). The air pump rotation is clockwise when viewed from its drive end (see Figure 5-2). When operating a standard 60" boiler the fan motor and air pump should rotate clockwise when viewed from the front of the boiler (see Figure 5-3).**

Before operating the boiler feed pump or oil supply pump, be sure all valves in the line are open or properly positioned.

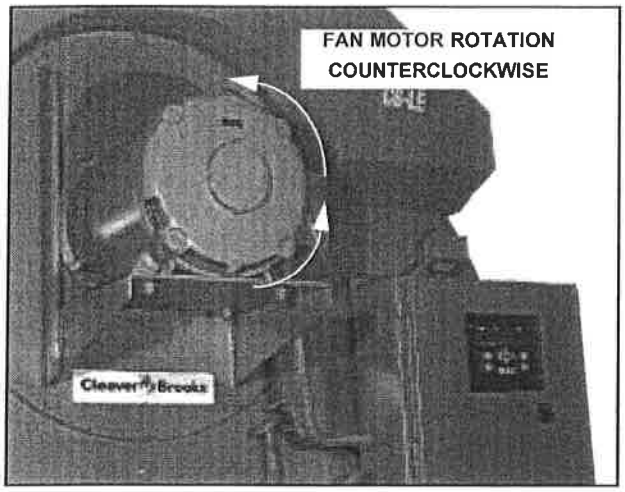

Figure: 5-1 Fan Motor CB-LE

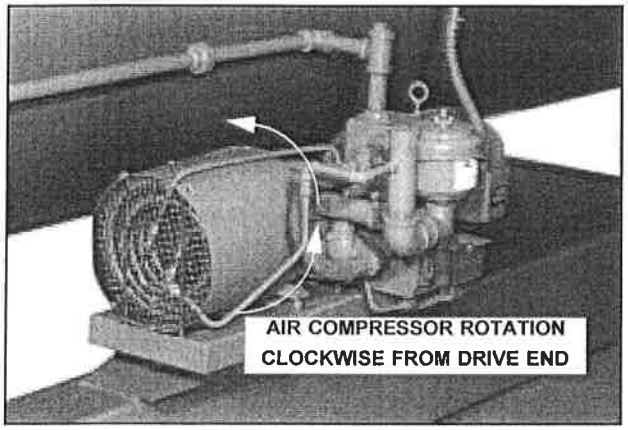

Figure: 5-2 Air Compressor CB-LE (CB Option)

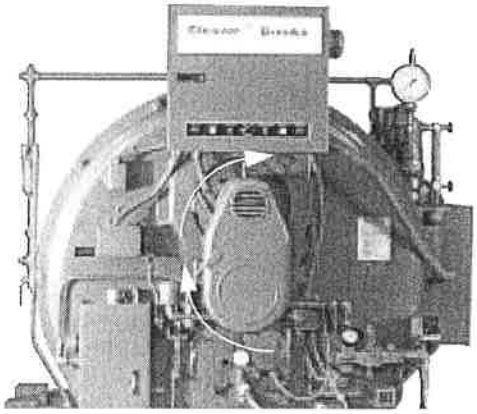

Figure: 5-3 Fan Motor and Air Pump, Clockwise Rotation (CB)

For safety reasons, perform a final pre-startup inspection, especially checking for any loose or incomplete piping or wiring or any other situations that might present a hazard.

Note: The pressure vessel support legs are welded to mounting skids in front and secured by bolts at the rear of the pressure vessel. The bolts are tightened for shipment. When the boiler is installed, and prior to initial firing, the bolts securing the rear legs to the skid must be loosened to allow for expansion and contraction caused by differences in temperature between pressure vessel and skids and to avoid damage to the equipment.

B. CONTROL SETTINGS - STEAM AND HOT WATER

See Chapter 6 for adjustment instructions for the following controls.

Inspect the **Operating Limit Control** for proper setting.

1. The operating limit pressure control of a steam boiler should be set slightly above the highest desired steam pressure, but at least 10% lower than the setting of the safety valve.
2. The operating limit temperature control on a hot water boiler should be set slightly above the highest desired water temperature and within the limits of the pressure vessel.

Inspect the **High Limit Control** for proper setting.

1. On a high pressure steam boiler, the high limit pressure control should be set approximately 10 psig above the operating limit pressure control setting, if feasible, or midway between the operating limit pressure and the safety valve setting. The setting on a low pressure steam boiler may be 2 or 3 psig above the operating limit setting, but must not exceed the safety valve setting.
2. On a hot water boiler, the high limit temperature control should be 5-10°F above the operating limit temperature control setting but within the limits of the design pressure of the pressure vessel.

Inspect the **Modulating Control** for proper setting. The control must be set and adjusted so that the modulating motor returns to low fire position before the operating limit control opens. It is further desirable to have its low point setting somewhat below the cut-in setting of the limit control so that the burner operates in low fire position for a brief period on each start rather than immediately driving to a high fire position.

Note: The settings of all the above controls may require some readjustment after the boiler is started and running for a short period. The scale settings on the controls are relatively accurate, but are principally for use as guides. Final adjustment should be based on and agree with the reading of the steam pressure gauge or the water temperature thermometer.

Inspect the **Low-water Cutoff** and **Pump Control** as well as the **Auxiliary Low-water Cutoff** (if equipped with this optional device). Check for freedom of float movement. Float movement can be verified by observing the level of water in the gauge glass when the water supply has been cut off either by the stopping of the feed pump or by the closing of a valve, and the restarting of the pump or opening of the valve when water is drained from the pressure vessel. The importance of proper functioning of low-water controls cannot be over-emphasized. Be sure that the control and the piping is level.

The settings of controls relating to fuel, either oil or gas, are covered in subsequent sections.

In the event the boiler is equipped with optional control devices not listed here, be certain to ascertain that their settings are correct. If additional information is required, see your local Cleaver-Brooks authorized representative or contact Cleaver-Brooks.

On initial start-up or whenever the boiler is placed into operation from a "cold" start, the **Manual-automatic Selector Switch** should be set at "manual" and the **Manual Flame Control** set at "close." After the boiler is in operation and thoroughly warmed, the selector switch should be turned to "automatic," so that the burner firing rate may be controlled by the **Modulating Control** in accordance with load demands.

Close all power entrance switches (supplied by others).

C. GAS PILOT

The gas pilot should be checked for satisfactory performance prior to initial firing. Follow the pilot flame adjustment instructions given in Chapter 6.

On initial starting attempts, several efforts might be required to fully bleed the pilot line. While checking pilot adjustment, observe whether the pilot flame is extinguished promptly when the burner switch is opened. A lingering flame indicates a leaking gas pilot valve, which is a condition requiring correction before proceeding.

D. ATOMIZING AIR

The supply and pressure of the atomizing air on an oil-fired burner should be checked. Before starting, inspect the oil pump lube oil level. Add oil if necessary to bring the level to the mid-point or slightly higher of the sight glass. Use SAE

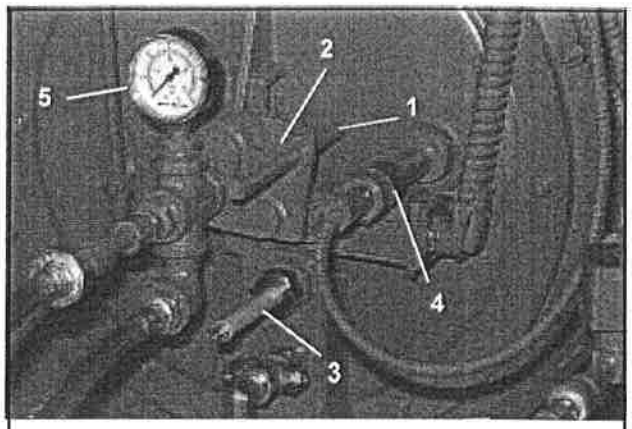

1. BURNER DRAWER LOCKING PIN
2. OIL DRAWER LATCH
3. IGNITION ELECTRODE
4. SCANNER
5. ATOMIZING AIR PRESSURE GAUGE

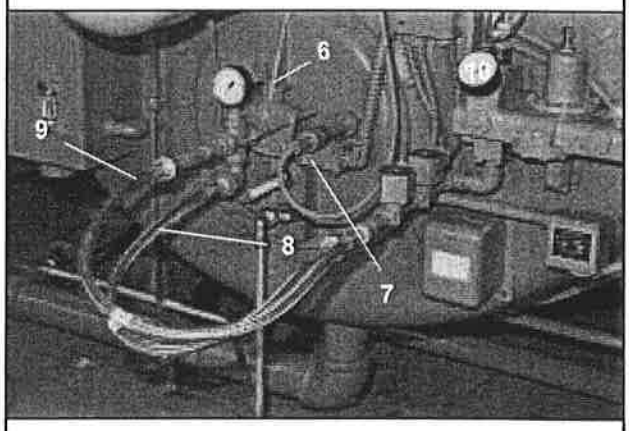

6. FLAME VIEW PORT
7. OIL DRAWER SWITCH
8. FUEL OIL LINE
9. ATOMIZING AIR LINE

Figure: 5-4 Burner Drawer With Gun Positioned For Firing Oil.

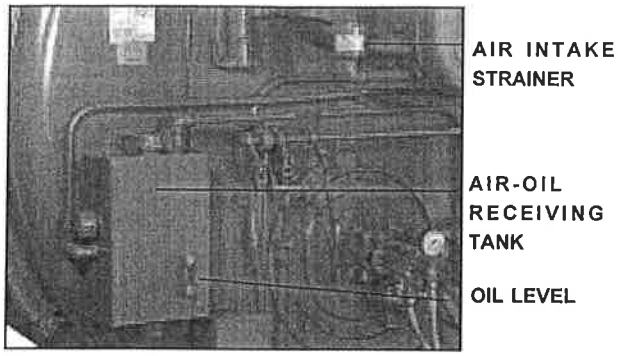

Figure: 5-5 Primary Air Strainer and Receiving Tank

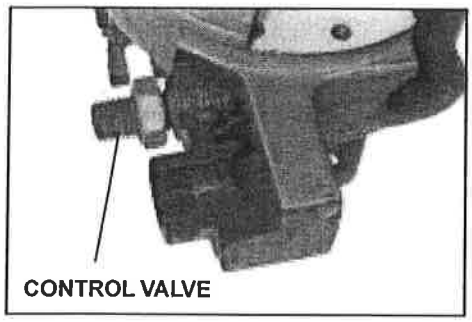

Figure: 5-6 Air Intake Control Valve

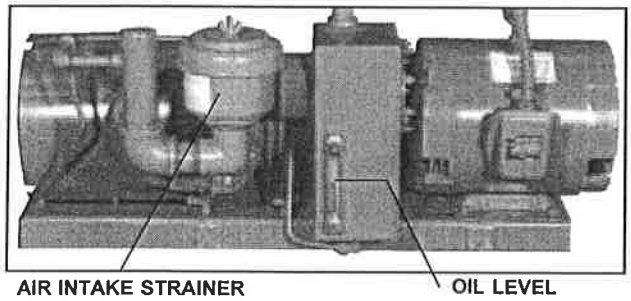

Figure: 5-7 Atomizing Air Compressor CB-LE (CB Option)

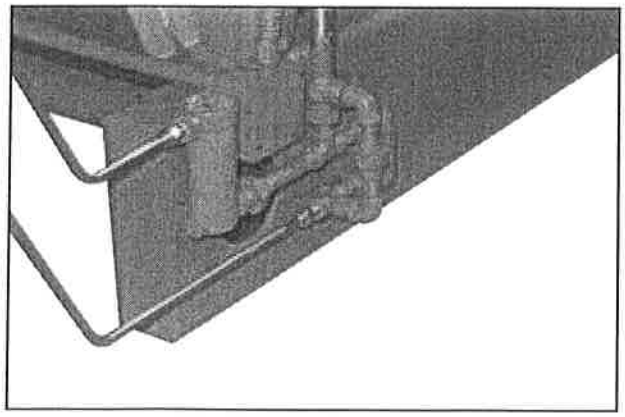

Figure: 5-8 Oil Piping

20 detergent oil of a grade mentioned in Chapter 8 and fill in accordance with instructions given there.

Check the oil level of the air intake strainer. When operating a standard CB boiler, make certain that the V-belt which drives the air pump is in place and has proper tension.

To verify air flow and pressure, place the burner **Run/test Switch** on the program relay to the test position. If the burner is a combination fuel burner, be sure that the gas/oil selector switch is set to "oil." Turn the **Burner Switch** on. The burner will cycle to the low fire pre-purge position and stop there.

Observe the reading on the air pressure gauge (Figure 5-4). With no oil flow, the pressure should be a minimum of 7 psi.

If there is no pressure, determine the cause and correct it before proceeding. Check for obstructions in the air inlet line, incorrect rotation, or a loose oil nozzle or other leaks. If the pressure is much higher without any oil flow, check for obstruction in the discharge line or at the oil nozzle. If there is no obstruction, restrict the air flow by adjusting the air intake valve screw, (see Figure 5-6)

The air pressure will increase when an oil flow exists. At low firing rate, the air pressure may rise to 12 psi or more.

Note: The air pressure should not exceed 35 psi at high fire. Greater air pressure causes excessive wear of the air pump, increases lube oil usage, and can overload the motor, thus causing damage to the equipment.

Note: Abnormally high pressure indicated on the nozzle air pressure gauge is an indication that the burner nozzle has become clogged. In the event of clogging, check the nozzle and clean as necessary.

After air flow has been verified, turn the burner switch off and return the run/test switch to the run position.

E. FIRING PREPARATIONS FOR NO. 2 OIL (SERIES 100-200)

Prior to initial firing, oil flow and pressure should be established and verified. Atomizing air pressure should also be established as outlined in Section D. The schematic flow diagram (Figure 2-25) indicates the flow of fuel and atomizing air.

Note: See section H and Chapter 8 for IFGR setting procedures.

If the burner is a combination fuel model, be certain that the **Main Gas Shutoff Cock** is closed and set the **Gas/oil Selector Switch** to "oil." Insert the burner drawer gun into its most forward position and latch it in place (see Figure 5-9).

Oil Flow - Open all valves in the oil suction and oil return lines.

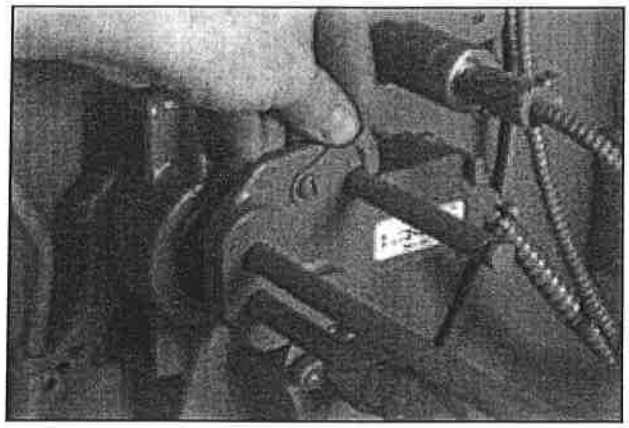

Figure: 5-9 Gun Locked In, Firing Oil

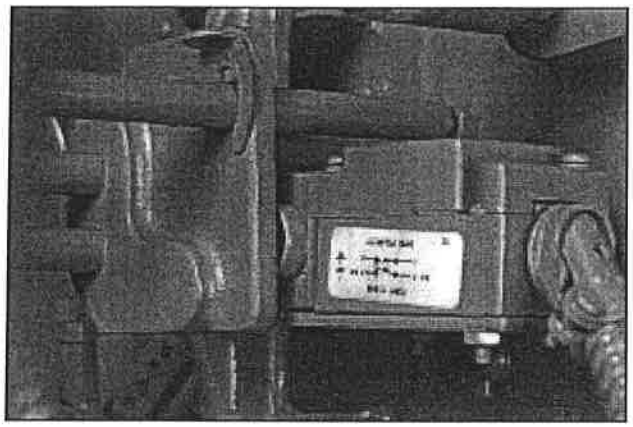

Figure: 5-10 Oil Drawer Switch Closed, Firing Oil

If the oil supply tank is located above the level of the pump and flow to the pump is by gravity, then it will usually be necessary to vent the suction line to allow oil to fill the line. Venting the suction line can generally be accomplished by cracking a union fitting, or by opening the cap of the oil strainer using care to prevent spillage of oil. Tighten the fitting or the cap as soon as oil flow appears.

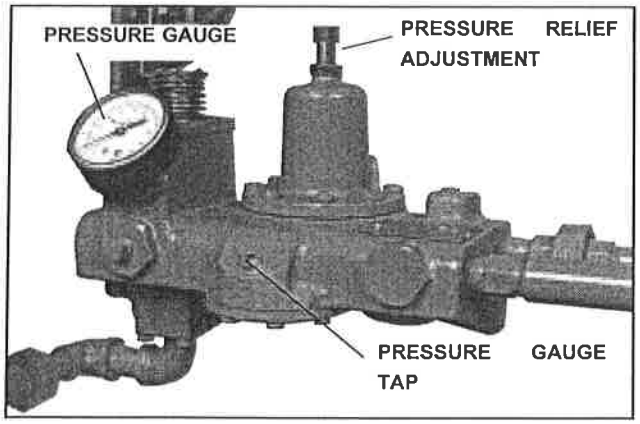

Figure: 5-11 Fuel Oil Controller

If the oil supply tank is below the level of the oil pump, it is MANDATORY that the suction line to the pump be completely filled with oil prior to starting the pump to avoid the possibility of damage to the pump gears. Non-lubricating fluids such as kerosene should not be used for priming.

Prior to priming the suction line and the initial start, check to make certain that all plugs, connections, etc., have been securely tightened to prevent leaks.

If the fuel oil supply originates from a pressurized loop, it is assumed that the pressure of the loop will be at a minimum of 75 psi. Under these conditions, the relief valve at the terminal block should be adjusted to the point where it becomes inoperative (or removed and openings plugged). To render inoperative, turn the adjusting screw in as far as possible.

A standard equipped boiler has a selector switch incorporated in the oil pump motor starter. Momentarily energize the starter to check for proper pump rotation. With the rotation verified, operate the pump to determine that oil circulation exists. Observe the regulated oil pressure gauge for indication that flow is established. If no pressure shows on the gauge after a few moments, stop the oil pump and re-prime. If the supply tank is lower than the pump, it is possible that the initial priming of the suction line, followed by operation of the pump, will not establish oil flow. This might be caused by obstruction in the suction line, excessive lift, inadequate priming, suction line leaks, etc. If oil flow is not readily established, avoid prolonged operation of the pump to minimize risk of damage to internal parts of the pump. **If oil flow is not established after a second or third priming attempt, a full investigation is required to determine the cause.**

A vacuum (or a compound pressure-vacuum) gauge should be installed at the suction port of the pump and its reading observed and recorded for future guidance. If a vacuum condition exists, the reading will reveal the tightness of the system. It is advisable to maintain the vacuum reading at less than 10" Hg. A vacuum in excess of 10" Hg. may allow oil to vaporize, causing cavitation, loss of prime, and unstable firing condition.

Oil Pressure - Oil supply pressure is regulated by adjusting the pressure relief valve at the oil terminal block (Figure 2-16). A pressure gauge should be installed in the terminal block and the relief valve adjusted to obtain a minimum reading of 75 psi when the burner is firing at maximum rate.

When oil is supplied from a pressurized loop to a multiple boiler installation, the relief valve in the loop should be properly adjusted to provide this reading. In this circumstance, the relief valve at the terminal block should be adjusted to the point when it will be inoperative (or removed and openings plugged). To render inoperative, turn the adjusting screw in as far as possible.

Adjustment may also be required to the regulator on the fuel oil controller (Figure 2-17). The pressure regulating valve is equipped with tubing that directs and adds atomizing air

pressure to the adjustable spring pressure. Since the air pump is not running at this time, only tentative adjustment can be made. Without the air supply, adjust the fuel oil pressure regulator so that the oil burner gauge registers approximately 35 psi.

The pressure gauge will indicate a higher reading when the flame is present and will increase as the firing rate increases. After the burner is firing and when the air pump is running, final adjustment can be made at the fuel oil controller.

Final regulation of oil flow to the nozzle can be done later, if necessary, by adjusting the metering cam screws as outlined in Chapter 6.

Starting - When all the conditions covered above and in Sections A, B, C and D are assured, the burner is ready for firing. Refer to Section H of Chapter 5 for IFGR starting and operating information.

F. FIRING PREPARATION FOR NO. 6 OIL (SERIES 400-600)

Prior to initial firing, oil flow, pressure and temperature should be established and verified. Atomizing air pressure should also be established as outlined in Section D. The schematic flow diagram (Figure 2-26) indicates the flow of fuel and atomizing air. **Prior to firing, attach combustion analysis instruments and monitor consistently throughout the startup sequence. Refer to the adjustment procedures in Chapter 6.**

If the boiler is a combination fuel model, be certain that the main gas shutoff cock is closed and set the gas/oil selector switch to "oil." Insert the burner drawer gun into its most forward position and latch it in place (see Figure 5-6, 5-7).

Oil Flow - Open all valves in the oil suction and oil return lines. Open the **By-pass Valve** on the fuel oil controller (Figure 2-18) until oil flow is established. Normally, the Orifice Valve is left in a closed position. However, on cold starts, it may be opened for brief periods to aid in establishing oil flow. The by-pass and orifice valves must be returned to their closed positions as soon as oil flow is established as indicated by a reading on the oil supply pressure gauge (Figures 2-18). Do not attempt to set pressures while valves are open.

Momentarily energize the fuel oil pump starter to check for proper pump rotation. With the rotation verified, prime the suction line strainer with oil and turn the fuel oil pump switch to the "ON" position. Check the oil supply pressure gauge for indication that oil flow is established. If no pressure shows on the gauge after a few moments, stop the oil pump and re-prime. Heavy oil in the storage tank must be at a temperature to provide oil viscosity to permit flow through the oil pump and suction line. If oil flow is not established after several attempts, the conditions preventing oil flow must be determined and corrected to avoid damage to the pump's internal mechanism.

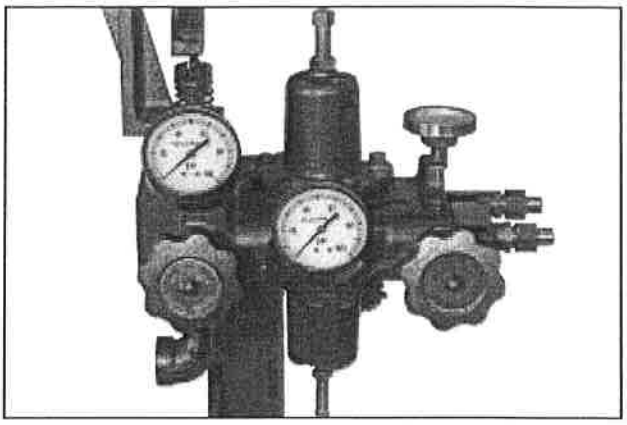

Figure: 5-12 Heavy Oil Fuel Controller

A vacuum gauge should be installed in the oil suction line and its reading observed and recorded for future guidance.

Oil Pressure - Oil pressure is regulated at several points. The first is at the relief valve at the oil heater (Figures 2-22). The relief valve should be set so that at maximum firing rate a minimum reading of 75 psi is obtained on the oil supply pressure gauge.

The other pressure adjustments are to the regulators on the fuel oil controller (Figure 2-18). Both the pressure regulating and the back pressure relief valves are equipped with tubing that directs and adds atomizing air pressure to the adjustable spring pressure. Since the air pump is not running at this time, only tentative adjustments can be made. Without the air supply, adjust the fuel oil pressure regulator so that the burner oil gauge registers approximately 35 psi. Adjust the back pressure relief valve so that its gauge reads about 10 psi less than the burner gauge.

The pressure gauges will indicate higher readings when a flame is present. The pressure will increase as the firing rate increases. The pressure reading on the two gauges on the controller will, despite the fluctuation, retain a nearly constant difference of 10 psi.

Final regulation of oil flow to the nozzle can be done, if necessary, by adjusting the metering cam screws as outlined in Chapter 6.

Suggested oil pressures at high fire operation:

Oil Supply at the Fuel Oil Controller	75 psi
Regulated Oil Pressure Gauge	30-45 psi

⚠ CAUTION

Before turning on the electric oil heater switch, be certain that the heater shell is filled with fuel oil and the flow is established. Failure to follow these instructions could result in equipment damage.

Oil Temperature - After determining that the heater shell is filled and that fuel oil circulation exists, turn the oil heater switch to "on." Adjust the electric oil heater thermostat (Figures 2-22) to maintain oil temperature at approximately 200°F.

The electric heater on burners equipped for No. 6 fuel oil is sized so that it is capable of supplying heated oil at a rate no greater than that required for low fire operation and is primarily supplied for convenience on cold starts. Heating coils utilizing either steam or hot water are supplied to provide sufficient heat so that higher rates of firing can be accomplished once steam pressure or hot water is available. In normal operation, the thermostat governing the electric heating element is kept at a lower setting than the thermostat governing admission of steam to the heater, or of hot water circulation, so that heating is not performed electrically except when steam or hot water is not available.

Set the steam thermostat (Figure 2-22) or the hot water thermostat (Figure 2-22) to maintain an oil temperature of 220-230°F. The electric heater will be turned off automatically as soon as steam or hot water provides heat.

Note: The temperatures listed are tentative. The composition of the fuel oil in a given grade can vary, necessitating a higher or lower preheating temperature. The viscosity of the oil at the nozzle should be less than 300 SSU and preferably less than 150 SSU. The actual temperature of the oil at the burner should be determined by flame appearance and good combustion based on a stack analysis. See Chapter 5 for additional information.

Close the manual by-pass valve after the temperature rise on the fuel oil controller thermometer is noted. Be certain that hot oil is moving through the controller. The orifice gate valve must also be closed. If the temperature drops, open the orifice gate valve until a rise is noted, then close it.

Once the correct setting of the heater thermostats has been established, set the low oil temperature switch (Figures 2-22) at the point approximately 30°F lower than the normal burning temperature. If the system is equipped with a high oil temperature switch, it should be set to open at 20 -30°F higher than normal burning temperature.

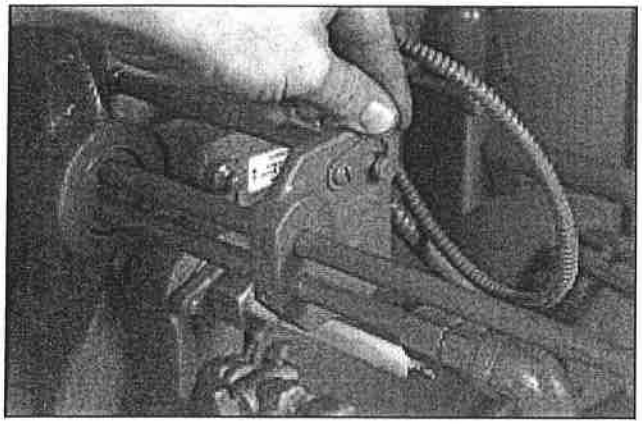

Figure: 5-13 Oil Gun Locked in OUT Position

Note: The maximum oil temperature allowed in the system is 250°F.

Starting - When all the conditions covered above and in Sections A, B, C and D are assured, the burner is ready for firing. Refer to Section H of Chapter 5 for further starting and operating information.

G. FIRING PREPARATIONS FOR GAS (SERIES 200-400-700)

• Prior to initial starting, check the linkage attached to the gas butterfly valve to assure that movement is free from binding.

• Verify the presence and availability of gas. On a new installation, representatives of the gas utility should be present when gas first flows into the system to supervise purging of the new gas line, unless they have already done so.

• Determine that the pilot is operating properly, as outlined in Section C, Chapter 5.

• Determine that sufficient pressure exists at the entrance to the gas train by installing a test gauge downstream of the regulator.

• The gas pressure regulator must be adjusted to the proper pressure level. Since the regulator is generally supplied by others, adjustment should proceed according to instructions supplied by its manufacturer.

It is necessary for the operator to know the burner requirements in gas quantity and pressure. The information can generally be found on the Dimension Diagram (DD) supplied by Cleaver-Brooks for the specific installation. Should the information not be readily available, consult the Cleaver-Brooks Service Department giving the boiler serial number. Chapter 6 contains additional information along with standard gas flow and pressure requirements.

• If the burner is a combination fuel model, set the gas/oil switch to "gas." Withdraw the oil burner gun and latch it in its rearward position (Figure 5-13).

• On initial start-up, it is recommended that the main gas shutoff cock (Figure 2-12) remains closed until the programmer has cycled through prepurge and pilot sequences. When the fuel light on the control panel comes on, observe the action of the motorized gas valve stem to determine that it opens when energized. As soon as it is confirmed, turn the burner switch "OFF" and let programmer finish its cycle. Check that the gas valve has closed. Again, turn the burner "ON". When the fuel valve light glows, slowly open the main gas cock. Main flame should ignite unless there is air present in the line. If the flame is not established within about 5 seconds, turn the burner switch "off" and allow the

programmer to recycle normally for a new lighting trial. Several efforts may be necessary to "bleed" air from the line.

⚠WARNING

Do not repeat unsuccessful lighting attempts without re-checking the burner and pilot adjustments. Failure to follow these instructions could result in serious personal injury or death

Note: The burner and control system is designed to provide a "prepurge" period of fan operation prior to establishing ignition spark and pilot flame. Do not attempt to alter the system or to take any action that might circumvent the feature.

Once the main flame is established, turn the **Burner Switch** to the "OFF" position and observe that the flame is extinguished promptly. The flame may continue to burn for a second or two after normal shutdown due to the gas remaining downstream from the fuel valve. If the flame continues to burn for a longer period or during blower motor spindown, it could indicate a main gas valve leak. Immediately turn the **Burner Switch** off and close the main gas cock. Investigate and correct the cause of the valve leakage before relighting the burner. **The main gas valve should provide a tight seal, provided nothing prevents tight closure. Foreign material may be present in either the new or renovated gas lines unless adequate care is taken in cleaning and purging.**

When the conditions covered in Section G and in Sections A, B and C are assured, the burner is ready for firing. Refer to Section H, Chapter 5 for further starting and operating information.

H. IFGR SETUP

Note: Initial IFGR linkage settings and adjustments must be established by a Cleaver-Brooks authorized representative. Set up of the LE Option requires simultaneous consideration of air-to-fuel ratios and NOx levels. This can only be accomplished with proper combustion emissions monitoring equipment with NOx, O2, CO, and smoke spot measuring capability.

It is recommended that the final "installed" settings as noted on Figure 5-14, 5-15 and 5-16 be recorded for future reference. The settings should be marked on the linkage as well.

Normally, once the system has been set and adjusted, the settings should not be changed unless conditions (including boiler settings) change. In that case, it will be necessary to contact your local Cleaver-Brooks authorized representative for assistance.

After the IFGR system is initially set up, it will start up with the boiler as an integrated boiler system. After shut down periods in which maintenance and /or adjustments have been performed on the fuel cams, fuel and air linkages, or IFGR control linkages, **the recommended approach to start-up is as follows:**

1. Set all boiler components to their initial settings as discussed in the appropriate chapters of this Operation and Maintenance manual.
2. Check fan impeller and motor rotation. Correct rotation is counter-clockwise when viewed from the front of the boiler.
3. Verify that all the IFGR components are set to the settings recorded on the Start Up report or in Figures 5-14, 5-15 and 5-16 (as noted by the Cleaver-Brooks authorized representative during original set up). Be sure that all linkages are secure.
4. Start and warm the boiler as described in this Operation and Maintenance manual.
5. Adjust the boiler components as described in this Operation and Maintenance manual to achieve proper boiler operation.

Refer to Chapter 8, Figure 8-10 for instructions on cassette removal and installation.

I. START-UP, OPERATING AND SHUTDOWN - ALL FUELS

Depending upon the fuel being burned, the applicable previous sections in Chapter 5 should be reviewed for preliminary instructions.

When firing with oil, be certain that the **Burner Gun** is in its most forward position and latched in place (see Figure 5-9). When firing with gas, the burner gun should be properly withdrawn and latched in place. The fuel selector switch should be, accordingly, set to either oil or gas.

Set the **Manual-Automatic Switch** (Figure 2-9) to "manual" and turn the manual flame control to "close."

Turn burner switch to "ON." The load demand light should glow. The low-water level light should remain out, indicating a safe water level in the boiler. The programmer is now sequencing. See Chapter 4 for sequence details.

Note: On an initial starting attempt, several efforts might be required to accomplish "bleeding" of fuel lines, main or pilot. If ignition does not then occur, do not repeat unsuccessful attempts without rechecking the burner and pilot adjustment.

BOILER HP	PPM NOX	"A"	"B"	"C"	"D"	"E"	"F"	"G"	"H"	"J"	"K"
125	60	10°	3/8"	3-1/8"	#2	#2	11°	79°	#8	40°	20°
	30	10°	13/16"	3-1/8"	#2	#2	11°	79°	#8	40°	20°
	25	10°	1"	5-3/4"	#2	#5	11°	79°	#8	30°	23°
	20	10°	1-1/4"	6-1/2"	#2	#5	7°	83°	#8	25°	24°
150	60	10°	3/8"	3-1/8"	#2	#2	11°	79°	#8	40°	20°
	30	10°	13/16"	3-1/8"	#2	#2	11°	79°	#8	40°	20°
	25	10°	1"	5-3/4"	#2	#5	8°	82°	#8	37°	23°
	20	10°	1-1/4"	6-3/8"	#2	#5	10°	80°	#8	33°	24°
200	60	10°	3/8"	3-1/8"	#2	#2	11°	79°	#8	40°	20°
	30	10°	13/16"	3-1/8"	#2	#2	11°	79°	#8	40°	20°
	25	10°	1"	2"	#2	#5	0°	90°	#8	46°	16°
	20	NOT OFFERED									

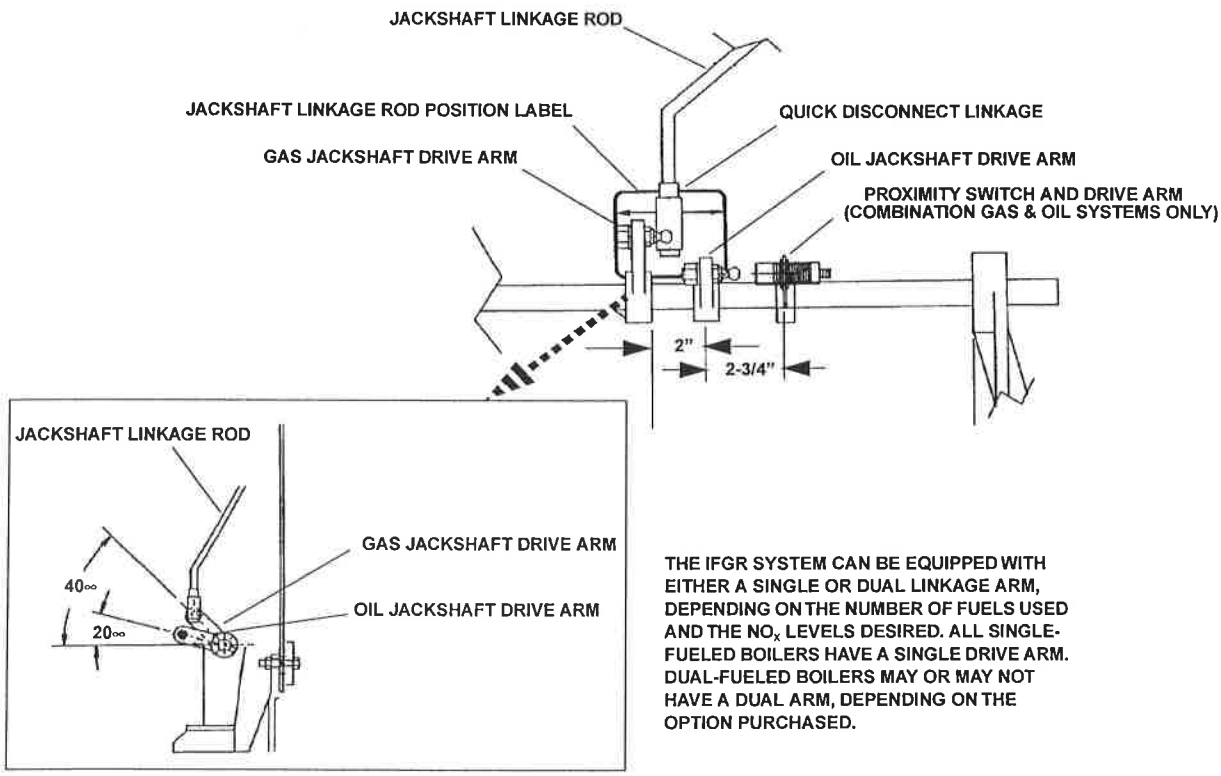

THE IFGR SYSTEM CAN BE EQUIPPED WITH EITHER A SINGLE OR DUAL LINKAGE ARM, DEPENDING ON THE NUMBER OF FUELS USED AND THE NO_x LEVELS DESIRED. ALL SINGLE-FUELED BOILERS HAVE A SINGLE DRIVE ARM. DUAL-FUELED BOILERS MAY OR MAY NOT HAVE A DUAL ARM, DEPENDING ON THE OPTION PURCHASED.

Figure: 5-14 Jackshaft Linkage Settings

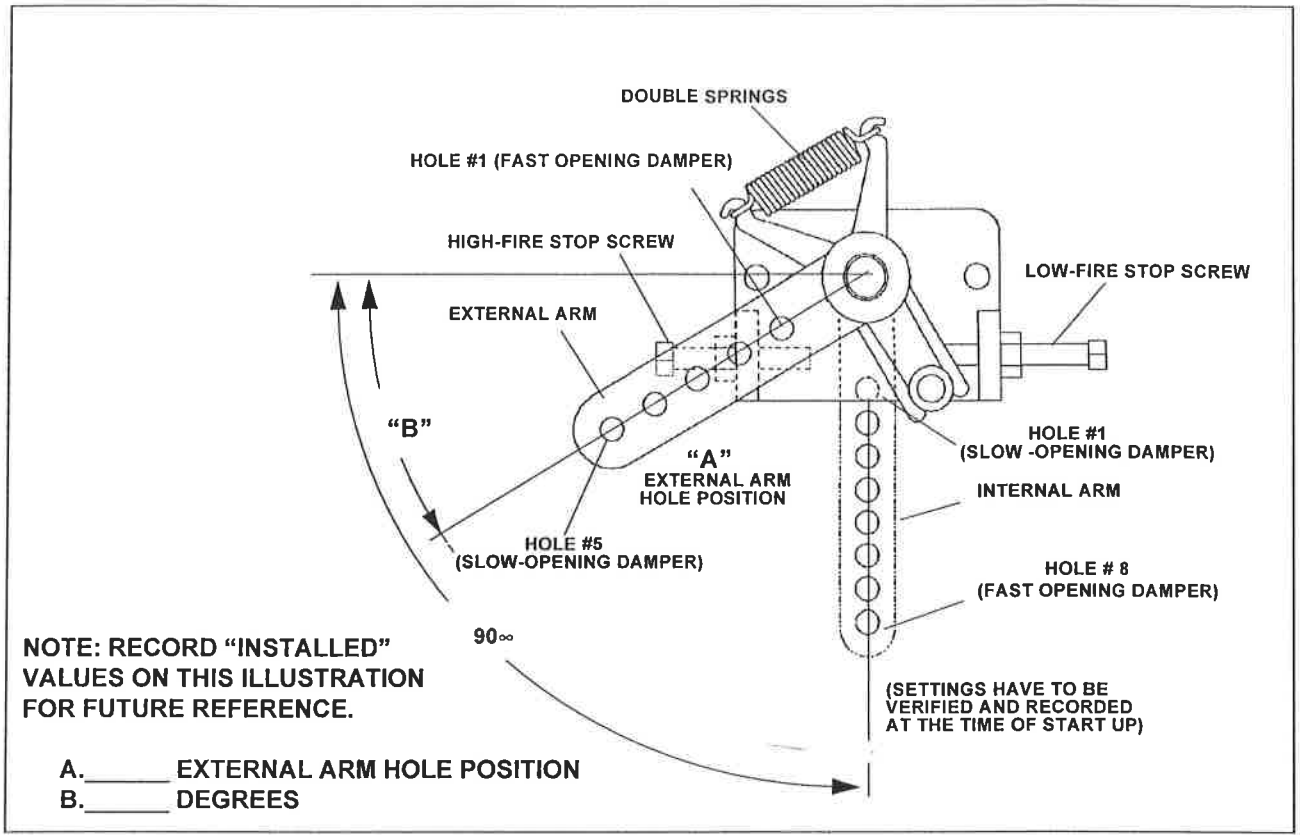

Figure: 5-15 Overtravel Linkage Settings

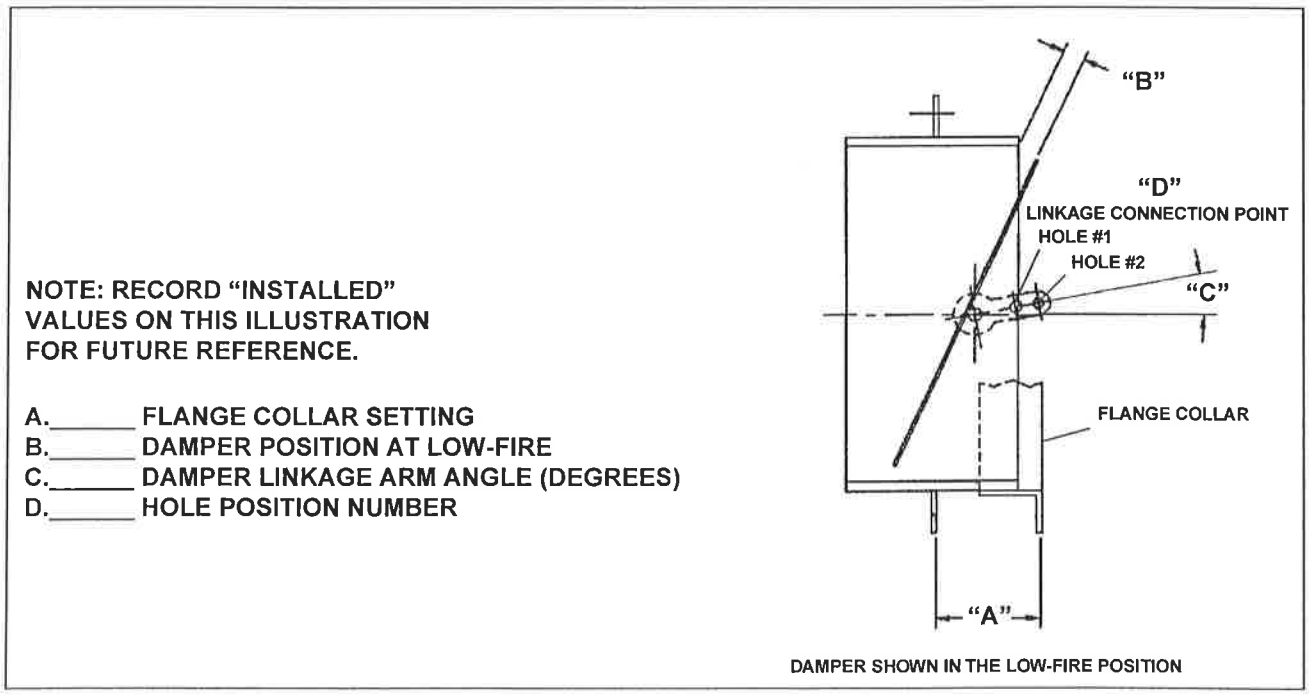

Figure: 5-16 Flange Collar and Damper Settings (Top View)

On ignition failure, the flame failure light will glow and the blower will purge the boiler of unburned fuel vapors before stopping. After ignition failure, wait a few moments before re-setting the lockout switch.

⚠WARNING

Do not re-light the pilot or attempt to start the main burner, either oil or gas, if the combustion chamber is hot and/or if gas or oil vapor combustion gases are present in the furnace or flue passages. Failure to follow these instructions could result in serious personal injury or death

⚠WARNING

The burner and control system is designed to provide a "pre-purge" period of fan operation prior to establishing ignition spark and pilot flame. Do not attempt to alter the system or take any action that might circumvent the "pre-purge" feature. Failure to follow these instructions could result in serious personal injury or death

After main flame ignition, the burner should be set on manual control at its low fire setting (that is, with manual flame control at "close") until the boiler is properly warmed. Close the steam header.

In the case of a steam boiler, CLOSE THE TEST VALVE when the steam begins to appear.

A hot water boiler must have a continuous flow of system water through the vessel during the warm-up period. The entire water content of the system and boiler must be warmed prior to increasing fuel input.

If the flame at low fire provides insufficient heat to reach normal operating pressure or temperature after 30 minutes, gradually increase the firing rate by turning the **Manual Flame Control** in one point increments to no higher than the third cam screw. Operate at the increased fuel input rate for a period of time until an increase is noted in pressure or temperature.

After the boiler is thoroughly warmed, turn the manual flame control to high fire. At this point a combustion analysis should be made, with instruments, and fuel flow regulated as required. Refer to the adjustment procedures in Chapter 6. After making the high-fire adjustment, manually decrease the firing rate, stopping at each cam screw to analyze combustion gases, and adjust as required.

To properly perform the testing and adjusting, it is necessary that the burner be allowed to fire at a maximum rate long enough to achieve desired results.

Operating - Normal operation of the burner should be with the switch in the automatic position and under the direction of the modulating control. The manual position is provided for initial adjustment of the burner over the entire firing range. When a shutdown occurs while operating in the manual position at other than low fire, the damper will not be in a closed position, thus allowing more air than desired to flow through the boiler. The hot flame to cool air cycling subjects the pressure vessel metal and refractory to undesirables conditions.

With the switch set at "auto," the burner will operate on a modulating basis according to the load demand.

The burner will continue to operate with modulated firing until the operating limit pressure or temperature is reached, unless:

1. **The burner is manually turned "off."**
2. **A low-water condition is detected by low-water level control.**
3. **The electrical or fuel supply is interrupted.**
4. **The combustion air pressure or atomizing air pressure drops below minimum level.**

Note: There can be other reasons for shutdown such as motor overload, flame outages, tripped circuit breakers, blown fuses, or through other interlock devices in the circuitry.

When the burner is shut down normally, by either the **Operating Limit Control** or by manually switching the burner off, the load demand light no longer glows.

Shutdown through conditions causing safety or interlock controls to open will actuate the **Flame Failure Light** (and alarm if so equipped) and the **Load Demand Light** will remain lit. The cause of this type of shutdown will have to be located, investigated, and corrected before operation can be resumed. Refer to the "trouble-shooting" section in Chapter 7.

Shutdown - When the **Operating Limit Control** setting is reached to open the circuit or if the burner switch is turned "off," the following sequence occurs.

The fuel valve is deenergized and the flame is extinguished. The timer begins operation and the blower motor continues running to force air through the furnace in the post-purge period.

At the end of the programmed post-purge period, the blower motor is turned off. The air pump motor of an oil-fired burner is also turned off. The timer has returned to its original starting position and stops. The unit is ready to re-start.

⚠WARNING

It is advisable to check for tight shut-off of fuel valves. Despite precautions and strainers, foreign material in either new or renovated fuel lines may lodge under a valve seat and prevent tight closure. The situation is especially true in new installations. Promptly correct any conditions causing leakage. Failure to follow these instructions could result in serious personal injury or death

J. CONTROL OPERATIONAL TEST AND CHECKS

Proper operation of the various controls should be verified and tested when the boiler is initially placed into service, or whenever a control is replaced. Periodic checks should be made thereafter in accordance with a planned maintenance program.

The operating limit control may be checked by allowing steam pressure or water temperature to increase until the burner shuts down. Depending upon the load, it may be necessary to manually increase the firing rate to raise steam pressure to the burner shut off point. If the load is heavy, the header valve can be closed or throttled until the pressure increases. Observe the steam gauge to check the cut off pressure as the operating limit control shuts the burner down. Slowly open the header valve to release steam pressure and check the cut-in setting as the burner restarts. Check the modulating control for the desired operating pressure range. See Chapter 6 for instructions on the adjustment of controls.

The water temperature on a hot water boiler that may be operating at less than full load may be raised by manually increasing the firing rate until the burner shuts down through the action of the operating limit control. Observe the thermometer to verify the desired settings at the point of cut-out and again when the burner restarts. Return the manual automatic switch to "automatic" and check the modulating control for the desired temperature range. See Chapter 6 for instructions on the adjustment of the controls.

Check the proper operation and setting of the low-water cutoff (and pump operating control, if used).

Proper operation of the flame failure device should be checked at startup and at least once a week thereafter. Refer to Chapter 8 for information on flame safety checks. Check the program relay's annunciation for any system failure. Observe the promptness of ignition of the pilot flame and the main flame.

Check for tight shut-off of all fuel valves. Despite precautions and strainers, foreign material may lodge under a valve seat and prevent tight closure. Promptly correct any conditions that cause leakage.

Notes

CHAPTER 6

Adjustment Procedures

A. General.....6-1
B. Linkage - Modulating Motor & Air Damper.....6-2
C. Modulating Motor.....6-3
D. Modulating Motor Switches - Low Fire and High Fire.....6-3
E. Burner Operating Controls General.....6-4
F. Modulating Pressure Controls (Steam).....6-6
G. Operating Limit Pressure Control (Steam).....6-6
H. High Limit Pressure Control - (Steam).....6-6
I. Modulating Temperature Control - (Hot Water)....6-6
J. Operating Limit Temperature Control- (Hot Water).6-7
K. High Limit Temperature Control - (Hot Water)....6-7
L. Low-Water Cutoff Devices.....6-7
M. Combustion Air Proving Switch.....6-7
N. Atomizing Air Proving Switch.....6-7
O. Gas Pilot Flame Adjustment.....6-8
P. Gas Pressure and Flow Information.....6-9
Q. Gas Fuel Combustion Adjustment.....6-11
R. Low-Gas Pressure Switch.....6-13
S. High-Gas Pressure Switch.....6-14
T. Fuel Oil Pressure and Temperature - General....6-14
U. Fuel Oil Combustion Adjustment.....6-17
V. Burner Drawer Adjustments.....6-18
W. Oil Drawer Switch.....6-18
X. Low-Oil-Temperature Switch.....6-18
Y. High-Oil-Temperature Switch.....6-18
Z. Low-Oil-Pressure Switch.....6-19
AA. Electric Oil Heater Thermostat.....6-19
BB. Steam Oil Heater Thermostat.....6-19
CC. Hot Water Oil Heater Thermostat.....6-19
DD. Steam Heater Pressure Regulator.....6-19

Note: If your boiler is equipped with a CB-HAWK™ boiler management control system, refer to CB-HAWK Installation, Operating and Servicing Manual No. 750-133 for specific information regarding procedures described in this section.

A. GENERAL

Each Cleaver-Brooks boiler is tested for correct operation before shipment from the factory. However, variable conditions such as burning characteristics of the fuel and operating load conditions will require further adjustment. Contact your local qualified Cleaver-Brooks Service representative after installation to assure correct start-up and maximum operating efficiency and economy.

A combustion efficiency analysis made during the initial start-up will help to determine what additional adjustments are required in a particular installation.

Prior to placing the boiler into service, a complete inspection should be made of all controls, connecting piping, wiring, and all fastenings such as nuts, bolts and setscrews to be sure that no damage has occurred, or that adjustments have not changed during shipment and installation.

The adjustment procedures in Chapter 6 apply to standard components furnished on steam or hot water boilers fired with gas and/or the various grades of oil.

B. LINKAGE - MODULATING MOTOR AND AIR DAMPER

The linkage consists of various arms, connecting rods, and swivel ball joints that transmit motion from the modulating motor to the metering cam(s), to the rotary air damper, and to the gas butterfly valve, and the IFGR system used on the CB-LE.

When properly adjusted, a coordinated movement of the damper and metering cams within the limits of the modulating motor travel is attained to provide proper fuel-air ratios through the firing range and NOx emission levels.

In linkage adjustments there are several important factors that must serve as guides.

1. The modulating motor must be able to complete its full travel range.

> **⚠ CAUTION**
>
> ***Do not restrict the full travel of the modulating motor. Failure to follow these instructions could result in equipment damage.***

2. Initial adjustment should be made with the motor in full closed position, that is with the shaft on the power end of the motor in its most counterclockwise position.

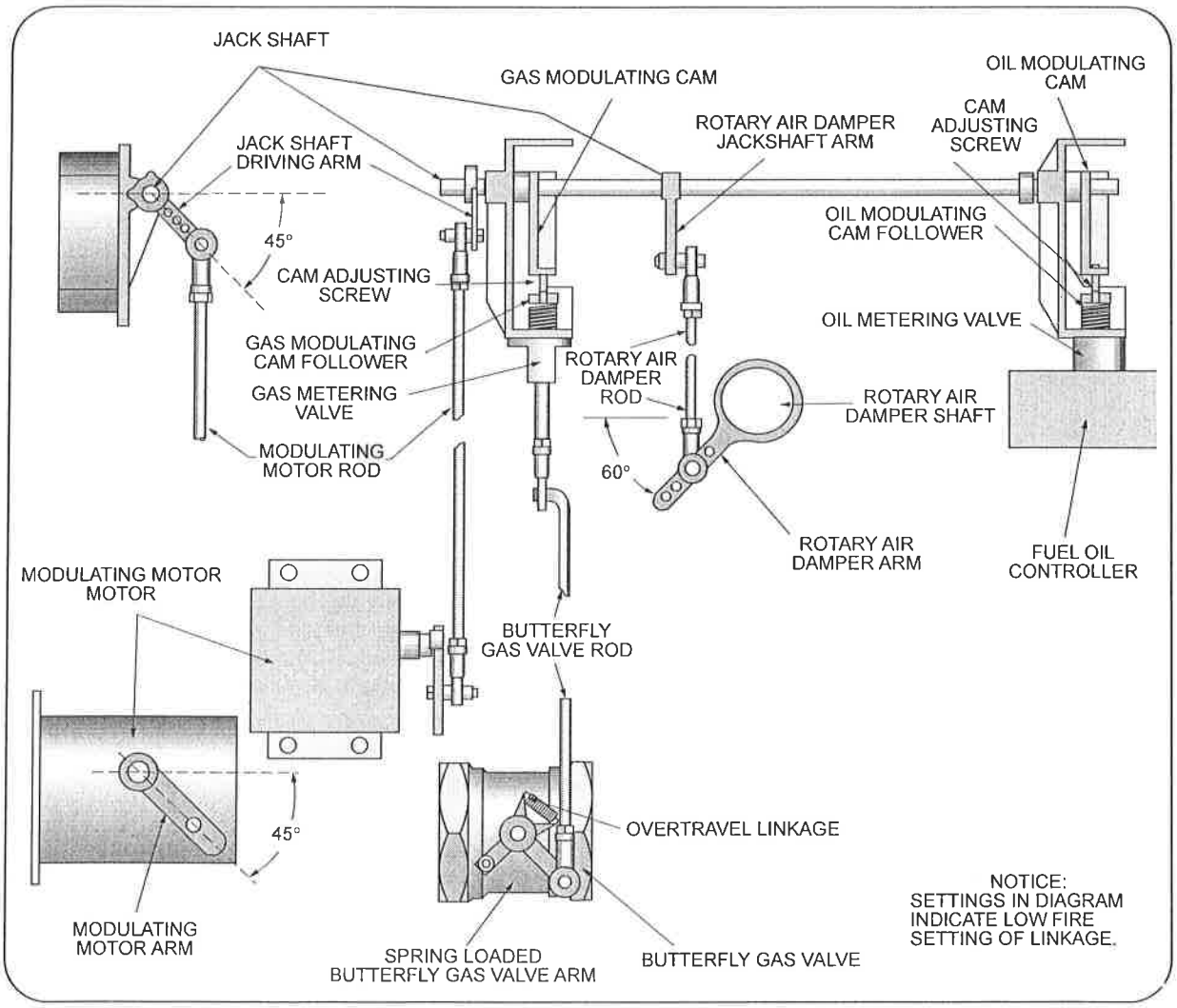

Figure: 6-1 Complete Linkage Assembly - Combination Gas and Oil

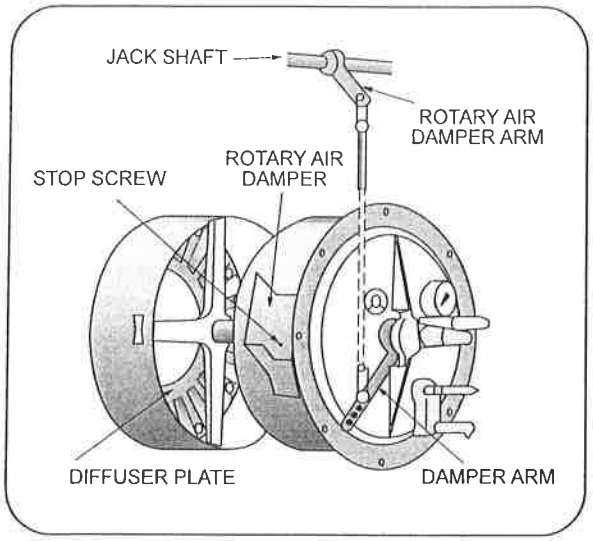

Figure: 6-2 Rotary Air Damper

3. The closer the connector is to the drive shaft, the less the arm will travel; the closer the connector is to the driven shaft, the farther that arm will travel.
4. Over-travel linkage, where used, should not be required in order to extend its spring to the fullest stretch.

With the modulating motor in the low fire position, the arm on its shaft should be at an angle of 45° below the horizontal. The driven arm on the jack shaft should also be 45° below horizontal. Secure both arms and fit the connecting linkage rod in place between them. Refer to Figure 6-1.

Position the oil and/or gas modulating cams on the jackshaft so that the cam follower assembly is between the first and second cam adjusting screws (under the first adjusting screw for High Turndown Burners). In this position, fuel delivery is at low fire rate. Tighten the set screws to secure the cams on the jackshaft.

Refer to Figure 6-2. The stop screw in the rotary air damper limits damper travel at both closed (low fire) and fully opened (high fire) positions. The screw is provided so that it is possible to tell, even with the burner is in place, whether the damper rotor is in fully opened or closed position. Rotating the damper clockwise to the stop screw opens the damper. Rotating the damper counterclockwise to the stop screw closes the damper. Normally, the rate of flow of air through the damper with the rotor in low fire position is about one-third of maximum for a standard burner.

The amount of angular movement controlling the rate of air flow is determined by the location of the ends of the rotary air damper rod in both the jack shaft arm and the air damper arm. When the air damper is in low fire position, the jackshaft arm should be at 45° and the rotary air damper arm should be at an angle of approximately 60° below the horizontal (Figure 6-1). This will ensure that the angular movement of the damper starts slowly, increasing in rate as the high fire position is approached.

Prior to initially firing a boiler it is advisable to check for free movement of the linkage. The damper motor must be allowed to complete its full stroke and the damper must move freely from low to high fire position. Adjustment of linkage connected to a gas butterfly valve is described in Section Q of Chapter 6.

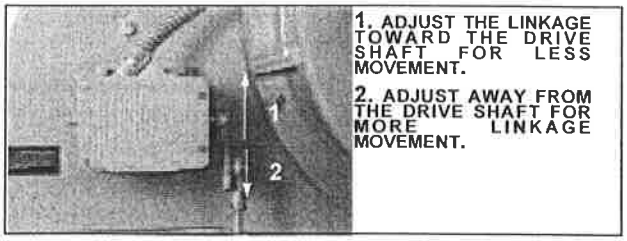

Figure: 6-3 Modulating Motor

C. MODULATING MOTOR

The modulating motor has a 90° shaft rotation. The motor manufacturer also provides a 160° stroke model for other applications. **If a replacement is obtained from someone other than a Cleaver-Brooks Service or Parts representative, it may have an incorrect stroke. To prevent damage, determine the 90° stroke prior to installing a replacement.**

The stroke may be determined by powering the motor and connecting terminals R-B to actually determine the stroke as motor drives to an open position.

D. MODULATING MOTOR SWITCHES - LOW FIRE AND HIGH FIRE

The modulating motor contains either one or two internal switches depending upon application. The microswitches are actuated by adjustable cams attached to the motor shaft.

Note: If the boiler is equipped with the CB-Hawk, there are no end switches. Do not attempt to adjust the Modulating Motor if the unit is equipped with the CB-Hawk

Factory replacement motors have the cams preset. The low fire start switch is set to make the red and yellow leads at approximately 8° on motor closing. The high fire purge air proving switch (located in the modulating motor) is set to make red and blue tracer leads at approximately 60° the on motor opening. Normally the settings are left as is, but job conditions may require readjustment. If the cams require adjustment or resetting, follow the instructions in the manufacturer's technical manual.

E. BURNER OPERATING CONTROLS - GENERAL

Note: Adjustments to the boiler operating controls should be made by an authorized Cleaver-Brooks Representative. Refer to the appropriate boiler Operation and Maintenance manual for specific information on boiler startup and operation.

The standard boiler operating control package consists of three separate controls, the **High Limit Control**, **Operating Limit Control** and the **Modulating control**.

The **High Limit Control** senses the hot water temperature or steam pressure. It is used as a safety limit to turn the burner off in the event the operating limit control fails. The high limit control should be set sufficiently above the operating limit control to avoid nuisance shutdowns.

The **Operating Limit Control** senses temperature or pressure and automatically turns the burner on to initiate the start up sequence when required and turns the burner off to initiate the shutdown sequence when the demand is satisfied. The control must be set to initiate startup only at the low fire position.

The **Modulating Control** senses changes in the hot water temperature or steam pressure and signals the modulating motor to control the flow of fuel and air to the burner. With either steam or hot water boilers, the modulating control must be set to ensure the burner is at its minimum low fire position before the operating limit control either starts or stops the burner.

When adjusting or setting controls, first be sure all control devices are securely mounted and level. With the temperature sensing control, make sure the sensing bulb is properly bottomed in its well and is secured against movement. Be sure the connecting tubing is not kinked.

The dial settings are generally accurate; although it is not unusual to have a slight variation between a scale setting and an actual pressure gauge or thermometer reading. Always adjust control setting to agree with pressure gauge or thermometer readings. **Accurate instrument readings are required.** When necessary use auxiliary test equipment to set controls.

Burner controls correctly set to match load demands will provide operational advantages and achieve the following desirable objectives:

- The burner will be operating in low fire position prior to shut down.
- The burner will operate at low fire for a brief period on each start during normal operation.
- Eliminates frequent burner on-off cycling.

Separate and independent controls affect modulated firing and burner on-off cycling. Figure 6-6 depicts a typical setting relationship of the **Operating Limit Control**, **Modulating Control** and the **High Limit Control**.

The burner will be "on" whenever the pressure or temperature is less than point **B** and "off" whenever pressure or temperature is greater than point **A**. The distance between points **A** and **B** represents the "on-off" differential of the **Operating Limit Control**.

In normal operation, the burner will shut down whenever the pressure or temperature rises above setting **A**. At that point the switch in the **Operating Limit Control** will open. As the pressure or temperature drops back to **B**, the **Operating Limit Control** closes and the burner will restart. The **Modulating Control** will signal the modulating motor to be in a low fire position. If the load demands exceed the low fire input potential, the **Modulating Control** will increase the firing rate proportionately as pressure or temperature falls toward point **D**. The modulating motor will stop at any

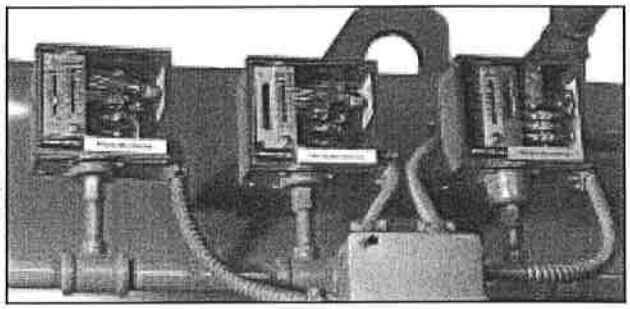

Figure: 6-4 Steam Operating Controls

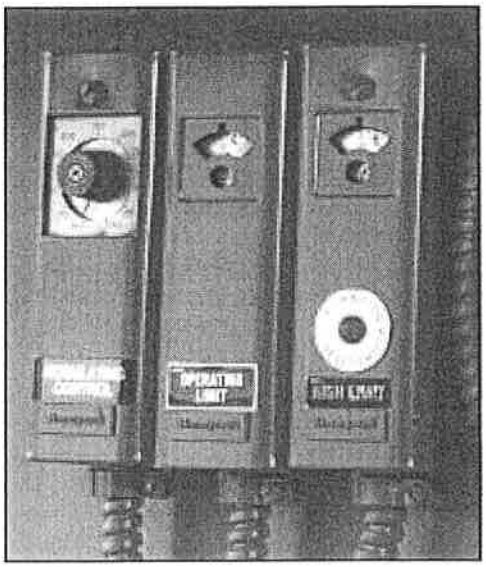

Figure: 6-5 Hot Water Controls

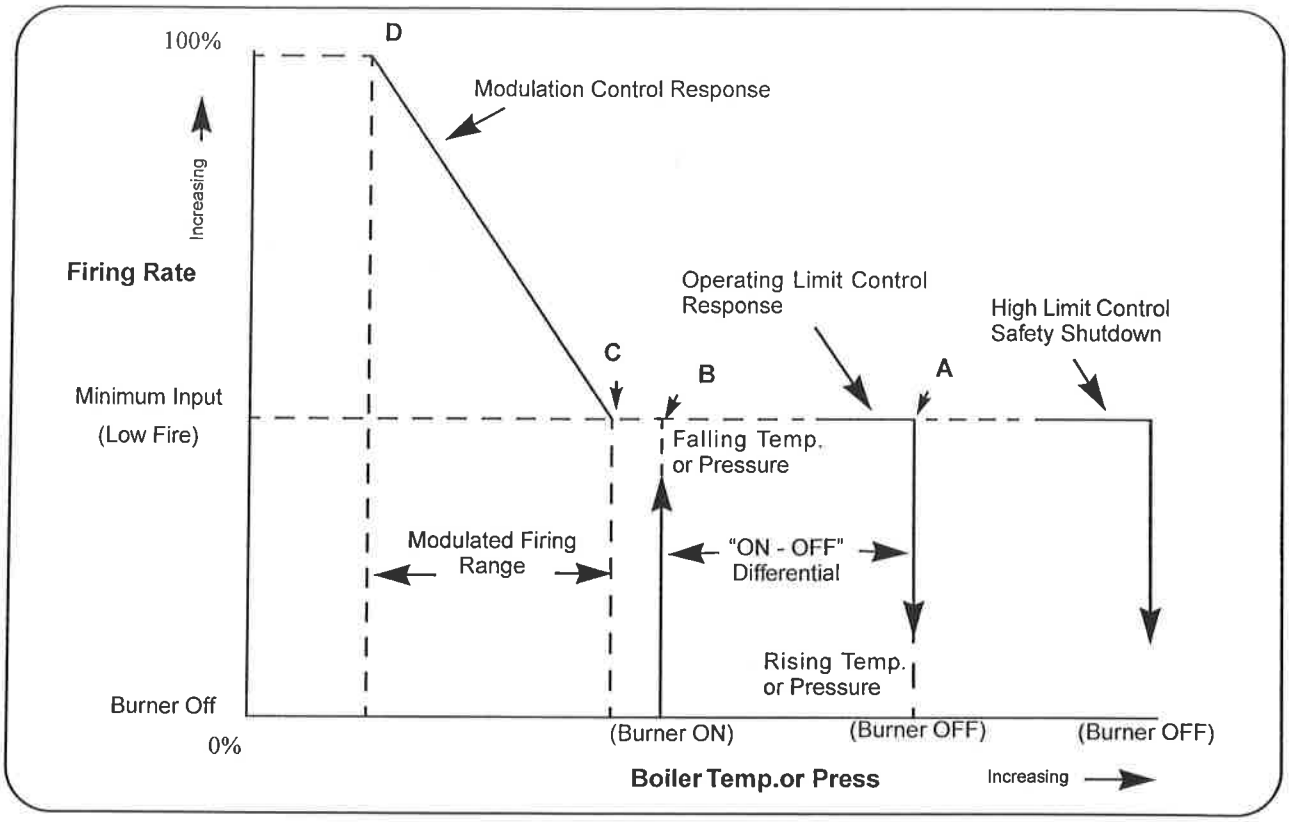

Figure: 6-6 Firing Graph

intermediate point between **C** and **D** whenever the fuel input balances the load requirement.

As the load requirement changes, the firing rate will change accordingly. Thus it is referred to as **modulated firing.**

Point **D** represents the maximum firing rate of the burner, or highfire. In the event pressure or temperature drops while the burner is firing at highfire, it indicates that the load exceeds the capacity of the boiler.

The firing graph (Figure 6-6) shows that point **B** and point **C** do not coincide. Extreme load conditions could require the points be closely matched.

When set as shown, with a time lag between **B** and **C**, the burner will be in a low fire position upon a restart and will fire at that rate for a short period of time before falling pressure or temperature requires an increase in the firing rate.

Note: On-Off cycling in excess of 8 cycles per hour will shorten the life of the combustion air motor and cause excessive wear on switch gear and pilot electrodes.

If points B and C overlap when restart occurs, the burner would drive to a higher firing position immediately after the main flame was proven.

Note: It is not recommended that the boiler controls be set so as to overlap the modulating control range and operating control range.

When firing a cold boiler, it is recommended that the burner be kept at low fire, under manual flame control, until normal operating pressure or temperature is reached. If the burner is not under manual control on a cold start, it will immediately move toward high fire as soon as the program control releases the circuit that holds the burner in low fire. The modulating control will be calling for high fire and the burner will move to that position as rapidly as the damper motor can complete its travel.

Note: Rapid heat input can subject the pressure vessel metal and refractory to undesirable conditions.

Do not operate the boiler at a temperature in excess of 90% of the safety valve relief setting. The closer the operating pressure is to the safety valve relief pressure, the greater the possibility of valve leakage. Continued leakage, however slight, will cause erosion and necessitate early safety valve replacement. The control settings on a hot water boiler must be within the temperature limits of the boiler.

Ideally, the boiler operating controls should be set under actual load conditions. Especially under new construction conditions, the boiler is initially started and set to operate under less than full load requirements. As soon as possible thereafter, the controls should be reset to provide maximum utilization of the modulating firing system. To accomplish maximum utilization, and assuming that air/fuel combustion

ratios have been set, make the required adjustments to the controls to bring the boiler pressure or temperature up to meet the load requirements.

To properly set the **Modulating Control**, carefully adjust it under load conditions, until the load is maintained with the burner firing at a steady rate. The firing rate at that point may be full high fire or slightly less, depending upon the relationship of the boiler size to the load.

When the **Modulating Control** is set and the burner is in full high fire, the scale setting of the **Modulating Pressure Control** on a steam boiler will indicate the low point of the modulating range. The scale setting of the **Modulating Temperature Control** on a hot water boiler will have a reading that indicates the midpoint of the modulating range.

The **Operating Limit** control should now be adjusted and the differential established. In an installation that does not require a very close control of steam pressure or water temperature the adjustable differential (Figure 6-6 A to B) should be set as wide as conditions permit, since a wide setting will provide less frequent burner cycling.

The **High Limit Control** provides a safety factor to shut the burner off in the event the **Operating Limit Control** should fail. The setting of the control should be sufficiently above the **Operating Limit Control** to avoid nuisance shutdowns. The setting, must be within the limits of the safety valve settings and should not exceed 90% of the valve setting. The control requires manual resetting after it shuts off the burner.

In the setting of the controls, consideration must be given to the time required for a burner restart. Each start, requires a prepurge period, plus the fixed time required for proving the pilot and main flame. In addition, approximately one-half minute is required for the damper motor to travel from low to high fire. The time lag may allow pressure or temperature to drop below desirable limits.

F. MODULATING PRESSURE CONTROL (Steam)

Turn the adjusting screw until the indicator is opposite the low point of the desired modulating range. Modulated firing will range between the low point and a higher point equal to the modulating range of the particular control. In 0-15 psi controls the range is 1/2 lb; in 5-150 psi controls the range is 5 lbs; in 10-300 psi controls the range is 12 lbs.

⚠ CAUTION

To prevent burner shutdown at other than low-fire setting, adjust the modulating pressure control to modulate to low fire BEFORE the operating limit pressure control shuts off the burner. Failure to follow these instructions could result in damage to the equipment.

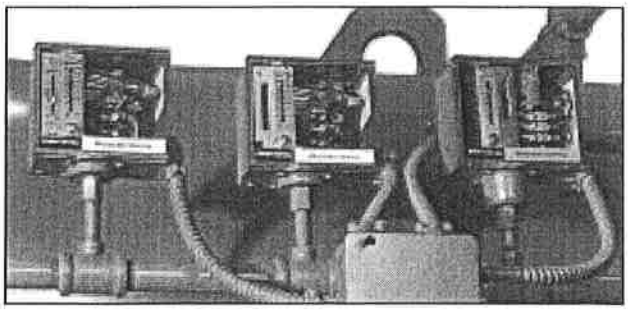

Figure: 6-7 Steam Operating Controls

G. OPERATING LIMIT PRESSURE CONTROL (Steam)

Set the "cut-out" (burner-off) pressure on the main scale using the large adjusting screw. Set the differential on the short scale by turning the small adjusting screw until the indicator points to the desired difference between cut-out and cut-in pressures. The "cut-in" (burner-on) pressure is the cut-out pressure MINUS the differential. The cut-out pressure should not exceed 90% of the safety valve setting.

H. HIGH LIMIT PRESSURE CONTROL (Steam)

Set "cut-out" (burner off) pressure on the main scale using the adjusting screw. The control will break a circuit when pressure reaches this point. The setting should be sufficiently above the operating limit pressure control to avoid shutdowns, and preferably not exceed 90% of safety valve setting. **The control requires manual resetting after tripping on a pressure increase.** To reset, allow pressure to return to normal and then press the reset button.

I. MODULATING TEMPERATURE CONTROL (Hot Water)

Turn the knob on the front of the case until the pointer indicates the desired setpoint temperature. The desired set point is the center point of a proportional range. The control has a 3 to 30° differential and may be adjusted to vary the temperature range within which modulating action is desired. With the cover off, turn the adjustment wheel until pointer indicates desired range.

⚠ CAUTION

To prevent burner shutdown at other than low-fire setting adjust modulating temperature control to modulate low fire BEFORE operating limit temperature control shuts off burner. Failure to follow these instructions could result in damage to the equipment.

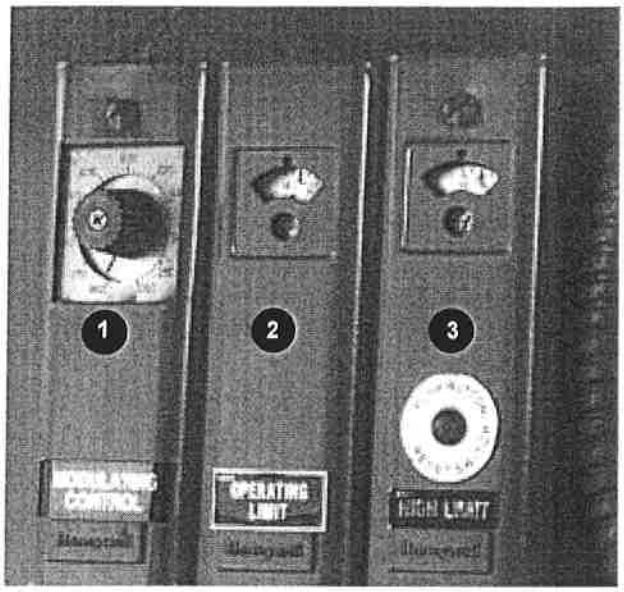

1. MODULATING TEMPERATURE CONTROL
2. OPERATING TEMPERATURE CONTROL
3. HIGH LIMIT TEMPERATURE CONTROL

Figure: 6-8 Hot Water Controls

J. OPERATING LIMIT TEMPERATURE CONTROL (Hot Water)

Set "cut-out" (burner off) temperature on the scale by inserting a screwdriver through the cover opening to engage the slotted head adjusting screw. The "cut-in" (burner on) temperature is the cut-out temperature MINUS the differential. The differential is adjusted from 5 to 30° F.

K. HIGH LIMIT TEMPERATURE CONTROL (Hot Water)

Set the "cut-out" (burner off) temperature on scale using the adjusting screw. The control will break the circuit and **lock out** on a rise in water temperature above the setting. The setting should be sufficiently above the operating limit temperature to avoid unnecessary shutdowns. On a 30 psig hot water boiler, the setting is not to exceed 240° F. **The control requires manual resetting after tripping on a temperature increase.** To reset, allow the water temperature to drop below the cut-out setting less differential, and then press the manual reset button.

L. LOW WATER CUTOFF DEVICES (Steam and Hot Water)

No adjustment is required since LWCO controls are preset by the original manufacturer. However, if the water level is not maintained as shown in Figure 3-2, inspect the devices immediately and replace as required.

M. COMBUSTION AIR PROVING SWITCH (CAPS)

Air pressure against the diaphragm actuates the switch which, when made, completes a circuit to prove the presence of combustion air. The pressure of the combustion air is at its minimum value when the damper is full open. The **Combustion Air Proving Switch** should be adjusted with the damper fully open. It should be set slightly below the minimum pressure, but not too close to that point to cause nuisance shutdowns.

The run/test switch on the program relay should be set to TEST. Turn the burner switch on. The blower will start (provided that all limit circuits are completed) and the programmer will remain in the low-fire (damper closed) portion of the prepurge.

Note: On an oil fired boiler, the atomizing air proving switch (AAPS) must also be closed.

Note: On a combination fuel fired burner, the fuel selector switch could be set at "gas" to eliminate the atomizing air proving switch from the circuitry.

To have the modulating damper motor drive to high fire (damper open), remove the cover from the motor and remove the wire from terminal W.

Slowly turn down the **Combustion Air Proving Switch**, adjusting, screw until it breaks the circuit. Here the programmer will lock out and must be manually reset before it can be restarted. Add a half turn or so to the adjusting screw to remake its circuit.

Recycle the program relay to be sure that normal operation is obtained. Replace the wire on terminal W and reinstall the cover. Return the test switch to the RUN position.

N. ATOMIZING AIR PROVING SWITCH

The air pressure against the diaphragm actuates the switch which, when closed, completes a circuit to prove the presence of atomizing air. The pressure of the atomizing air is at its minimum value when there is no fuel present at the nozzle. Adjustment of the switch should be done while the unit is running but not firing. The control should be set slightly below the minimum pressure, but not too close to that point to cause nuisance shutdowns.

The control adjustment may be made during the prepurge period of operation by stopping the programmer during the prepurge period through the use of the TEST switch. Refer to the control instruction bulletin for details.

The adjustment screw of the **Atomizing Air Proving Switch** can then be adjusted until it breaks the circuit. Here, the programmer will lock out and must be manually reset before it can be restarted. Turn the adjusting screw up a half turn or so to remake the circuit.

The adjustment of the air switch may be made either during the damper closed or damper open position of prepurge. It is also possible to make the adjustment with the relay stopped in the damper open position in a similar manner to the adjustment of the **Combustion Air Proving Switch** described in Section M.

After making the adjustment, recycle the control to be sure that normal operation is obtained. The TEST switch must be set to RUN position.

O. GAS PILOT FLAME ADJUSTMENT

The size of the gas pilot flame is regulated by adjusting the gas flow through the **Pilot Gas Regulator** and the **Pilot Adjusting Cock** on the front of the burner. The flame must be sufficient to ignite the main flame and to be seen by the flame detector. But an extremely large flame is not required. **An overly rich flame can cause sooting or carbon buildup on the flame detector.** Too small a flame can cause ignition problems.

Although it is possible to visibly adjust the size of the pilot flame, it is preferable to obtain a microamp or voltage reading of the flame signal.

The correct voltage or microamp readings can be found in the information supplied with the flame safeguard system.

The program relay used may be of the type that provides message information that includes a constant flame signal of dc voltage. In this case a separate dc voltmeter is not required.

To Measure and Adjust Pilot:

1. When making a pilot adjustment, turn the **Manual-Automatic Switch** to "manual" and the **Manual Flame Control** to "close." Open both the **Pilot Cutoff Cock** and the **Pilot Adjusting Cock**. The **Main Gas Cock** should remain closed.

The regulator in the pilot line, if provided, is to reduce the gas pressure to suit the pilot's requirement of between 5 to 10" WC. Regulator adjustment is not critical; however, with a lower pressure the final adjustment of the pilot flame with adjusting cock is less sensitive.

2. Connect the micro-ammeter as outlined earlier.
3. Turn the burner switch on. Let the burner go through the normal prepurge cycle. When the ignition trial period is signaled, set the test switch to the TEST position to stop the sequence.
4. If the pilot flame is not established within 10 seconds, turn off the burner switch. Repeat the lighting attempt.

Note: On an initial starting attempt, portions of the fuel lines may be empty and require "bleeding" time. It is better to accomplish this with repeated short lighting trial periods with intervening purge periods than to risk prolonged fuel introduction. If the pilot does not light after several attempts, check all components of the pilot system.

5. When the pilot flame is established, and with the **Pilot Adjusting Cock** wide open, remove the **Flame Detector** from the burner plate. The pilot flame can then be observed through this opening.

⚠WARNING

Wear a protective shield or suitable glasses and keep eyes sufficiently away from the sight tube opening to avoid serious personal injury or death. Never remove the flame detector while the main burner is firing. Failure to follow these instructions could result in serious personal injury or death.

⚠WARNING

When checking the pilot flame, be aware the electrode is energized. Failure to follow these instructions could result in serious personal injury.

6. To make the final adjustment, slowly close the **Gas Pilot Adjusting Cock** until the flame can no longer be seen through the sight tube. Then slowly open the cock until a flame providing full sight tube coverage is observed.

The adjustment must be accomplished within the time limit of the safety switch or approximately 30 seconds after the detector is removed. If the control shuts down, manually reset it. Replace the detector and repeat the process from step 5.

7. When a suitable flame as indicated in paragraph 6 is obtained, replace the detector. Observe the reading on the micro-ammeter. The reading should be between 2-1/4 and 5 microamps when using a lead sulfide detector and a standard amplifier. See the flame signal table in the manufacturer's bulletin for values of other combinations.

The flame signal indicated on the annunciator type relay should not be less than 10 Vdc, and may be as high as 20 Vdc or greater.

The reading must be steady. If the reading fluctuates, recheck the adjustment. Be sure that the flame detector is properly seated and that the lens is clean.

8. Return the test switch to the RUN position.

9. If main flame has not been previously established, proceed to do so in accordance with instructions elsewhere in the manual.

10. The reading of the main flame signal should also be checked. Observe the flame signal for pilot alone, pilot and main burner flame together and the main burner flame at high, low, and intermediate firing rate positions. Readings should be steady and in the range indicated in paragraph 7. If there are any deviations, refer to the trouble shooting section in the technical bulletin.

P. GAS PRESSURE AND FLOW INFORMATION

Because of variables in both the properties of gas and the supply system, it will be necessary to regulate the pressure of the gas to a level that produces a steady, dependable flame that yields highest combustion efficiency at rated performance yet prevents overfiring. Once the optimum pressure has been established, it should be recorded and periodic checks made to verify that the regulator is holding the pressure at this level. Occasional modification in fuel composition or pressure by the supplier may, at times, require readjustment to return the burner to peak efficiency. Since the gas pressure regulator itself is usually furnished by others, detailed adjustment instructions and adjusting procedures recommended by the manufacturer should be followed.

Pressure

The gas supplied must provide not only the quantity of gas demanded by the unit, but must also be at a pressure high enough to overcome the pressure-loss due to the frictional resistance imposed by the burner system and the control valves.

The pressure required at the entrance to the burner gas train (Figure 2-14) for rated boiler output is termed "net regulated pressure." The gas pressure regulator must be adjusted to achieve the pressure to assure full input.

The pressure requirement varies with boiler size, altitude, and type of gas train. Refer to Table 6-1 for pressure requirements.

The pressures listed are based on 1000 Btu/cu-ft natural gas at elevations up to 700 feet above sea level. For installation at higher altitudes, multiply the selected pressure by the proper factor from Table 6-2.

Gas Flow

The volume of gas flow is measured in terms of cubic feet and is determined by a meter reading. The gas flow rate required for maximum boiler output depends on the heating value (Btu/cu-ft) of the gas supplied and boiler efficiency. The supplying utility can provide the information.

Pressure Required at Gas Train Entrance with Two Valves and 2 1/2" Pipe		
BOILER HP	Standard	LE
125	7.5 "wc	9.0"wc
150	9.5"wc	11.5"wc
200	15.5"wc	16.5"wc

Table 6-1. Minimum Net Regulated Gas Pressure for Rated Boiler Output

ALTITUDE FEET ABOVE SEA LEVEL	CORRECTION FACTOR
1000	1.04
2000	1.07
2500	1.09
3000	1.11
4000	1.16
5000	1.21
6000	1.25
7000	1.30
8000	1.35
9000	1.40

Table 6-2. Pressure/Altitude Correction Factors

BOILER HP	HIGH FIRE INPUT Btu/hr, (GAS)	LOW FIRE INPUT Btu/hr, (GAS)
125 CB	5,230,000	1,308,000
150 CB	6,277,000	1,569,000
200 CB	8,369,000	2,092,000
BOILER HP	**HIGH FIRE INPUT Btu/hr, (OIL)**	**LOW FIRE INPUT Btu/hr, (OIL)**
125 CB-LE	5,103,000	1,276,000
150 CB-LE	6,124,000	1,531,000
200 CB-LE	8,165,000	2,041,000

Table 6-3. Standard Burner Required Input

REGULATOR INLET PRESSURE (PSIG)	PRESSURE FACTOR
1	1.05
2	1.11
3	1.18
4	1.25
5	1.32
6	1.39
7	1.45
8	1.53
9	1.59
10	1.66
11	1.72
12	1.81
13	1.86
14	1.93
15	2.00

Table 6-5. Pressure Correction Factors

$$\text{INPUT} = \frac{\text{OUTPUT x 100\%}}{\text{EFFICIENCY}}$$

$$\text{GAS FLOW} = \frac{\text{INPUT}}{\text{GAS BTU's/Ft}^3}$$

$$= \frac{\textbf{OUTPUT x 100}}{\textbf{EFFICIENCY x GAS BTU's/Ft}^3}$$

Pressure Correction

The flow rate outlined in Section P is based on a "base" pressure, which is usually atmospheric or 14.7 psia.

Meters generally measure gas in cubic feet at "line" or supply pressure. The pressure at which each cubic foot is measured and the correction factor for the pressure must be known in order to convert the quantity indicated by the meter into the quantity which would be measured at "base" pressure.

To express the volume obtained from an actual meter reading into cubic feet at base pressure, it is necessary to multiply the meter index reading by the proper pressure factor obtained from Table 6-5

Conversely:

To determine what the meter index reading should be in order to provide the volume of gas required for input, divide the desired flow rate by the proper pressure correction factor. This answer indicates the number of cubic feet at line pressure which must pass through the meter to deliver the equivalent number of cubic feet at base pressure.

As an example:

Assume that a 200 horsepower boiler is installed at 2,000 feet above sea level; is equipped with a standard gas train and a high turndown burner; and that 1,000 Btu natural gas is available with an incoming gas pressure of 3 psig. The pressure and flow requirements can be determined as follows:

Pressure

Correction for the 2,000 feet altitude must be made since altitude has a bearing on the net regulated gas pressure. The standard gas train requires 15.5" WC gas pressure at sea level (Table 6-1). Table 6-2 indicates a correction factor of 1.07 for 2,000 feet. Multiplying the results in a calculated net regulated gas requirement of approximately 16.6" WC. This is the initial pressure to which the regulator should be adjusted. Slight additional adjustment can be made later, if necessary, to obtain the gas input needed for burner rating.

Flow

Since the gas flow rate is based on standard conditions of flow, correction must be made for the supply pressure through the meter of 3 psig. Determine the flow rate by dividing the Btu content of the gas into the burner input (Table 6-3) and "correct" this answer by applying the correction factor for 3 psig (Table 6-4).

$$\frac{\text{Btu/hr Input}}{\text{Btu/cu-ft}} = \text{CFH (Cubic feet/hour)}$$

OR

$$\frac{8{,}369{,}000}{1{,}000} = 8{,}369 \text{ CFH (At 14.7 Ib-atmospheric base pressure)}$$

THEN

$$\frac{8{,}369}{1.18} = 7{,}092 \text{ CFH}$$

This is the CFH (at line pressure) that must pass through the meter so that the equivalent full input requirement of 25,100 CFH (at base pressure) will be delivered.

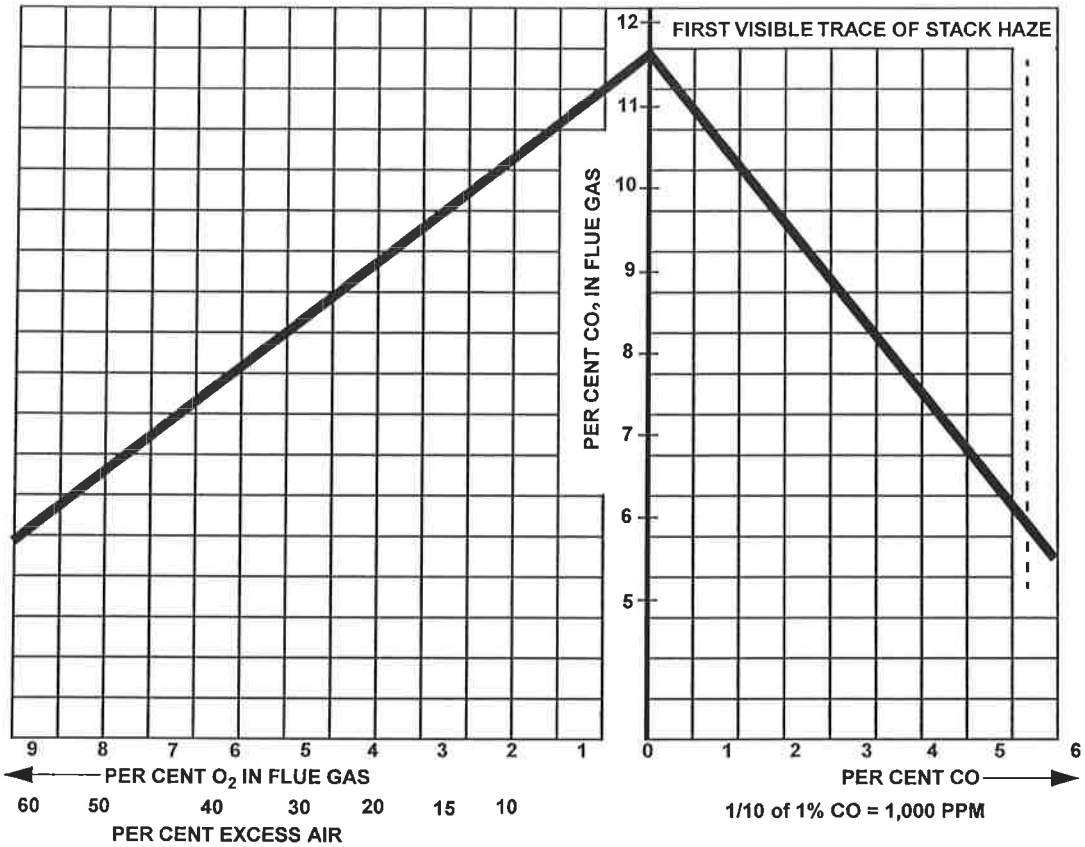

Figure: 6-9 Flue Gas Analysis Chart for Natural Gas

Checking Gas Flow

Your gas supplier can generally furnish a gas meter flow chart from which gas flow can be determined. After a short observation period, the information aids in adjusting the regulator to increase or decrease flow as required to obtain the rating.

Final adjustment of the gas fuel is carried out by means of the adjusting screws in the gas modulating cam, while performing a combustion efficiency analysis. See Section Q for details.

Note: The information given in this section is for all practical purposes sufficient to set and adjust controls for gas input. Your gas supplier can, if necessary, furnish exact correction factors that take into consideration Btu content, exact base pressure, specific gravity, temperature, etc., of the gas used.

Q. GAS FUEL COMBUSTION ADJUSTMENT

After operating for a sufficient period of time to assure a warm boiler, adjustments should be made to obtain efficient combustion.

Note: All adjustment should be done by a qualified boiler operator or your local Cleaver-Brooks Service representative.

Burner efficiency is measured by the amount or percentage of O_2 present in the flue gas. O_2 readings determine the total amount or excess air in the combustion process, above the point of stoichiometric combustion or perfect combustion. Stoichiometric combustion is a term used to describe a condition when there is the exact amount, molecule for molecule, of air for the fuel attempting to be burned. This can be accomplished under laboratory conditions, however it's not practical to attempt to meet this condition in a boiler. Stoichiometric combustion however, is the reference point used when setting fuel/air ratios in a boiler.

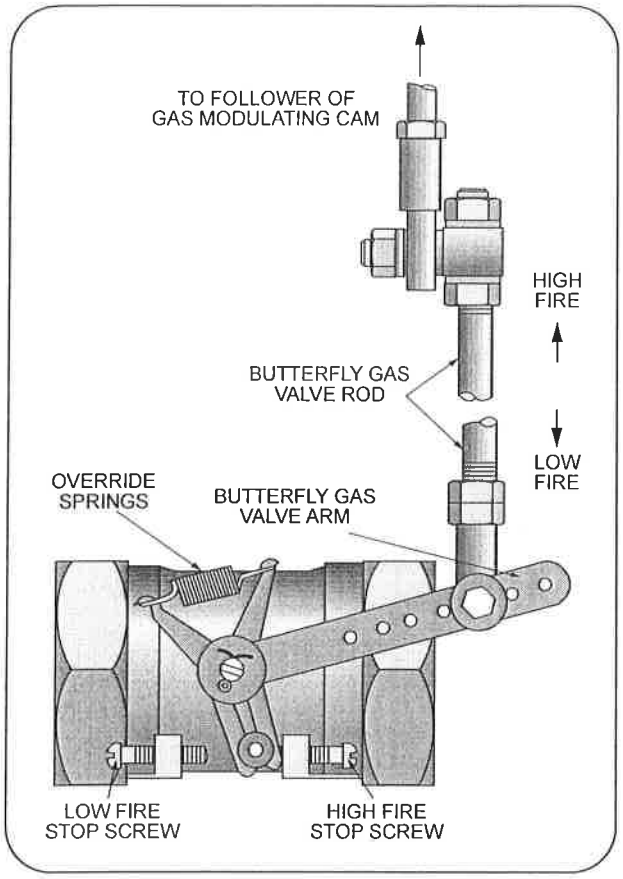

Figure: 6-10 Butterfly Gas Valve

There must always be excess air in the combustion process to account for changes in boiler room temperature and atmospheric conditions, and to ensure the combustion is on the proper side of the combustion curve (See Figure 6-9).

Proper setting of the air/fuel ratios at all rates of firing must be established by the use of a combustion or flue gas analyzer. The appearance or color of the gas flame is not an indication of its efficiency, because an efficient gas flame will vary from transparent blue to translucent yellow.

Most flue gas analyzers in use today measure the content, by percentage of oxygen (O_2) and carbon monoxide (CO) either by percent or parts per million (ppm). Carbon dioxide (CO_2) is not normally measured with todays flue gas analyzers, but may be displayed via a calculation.

The O_2 levels through the entire firing range of the burner, low fire to high fire should be tested. The burner manufactures recommendations on turndown should also be followed and the turndown range of the burner should not be exceeded.

⚠ CAUTION

Turndown in excess of the burner design may damage the burner diffuser and/or the burner housing. **Failure to follow these instructions could result in damage to the equipment.**

It's important to understand what the readings shown on an instrument refer to when setting combustion in a boiler. To assist with this understanding Figure 6-9 shows the relationship between O_2 levels (excess air) and the products of combustion for a typical flue gas analysis (natural gas).

One of the products of combustion is CO_2 (Carbon Dioxide). This is shown in percentage.

Another product of combustion is CO (carbon monoxide) and is shown in both percentage and parts per million (ppm). The maximum CO level standardly allowed is less than 400 ppm. However, this may change subject to local regulations.

The percent O_2 recorded on an instrument equates to percent excess air, i.e. 3% O_2 is approximately 15% excess air and 4% O_2 is approximately 20% excess air. The exact percentage of excess air is a mathematical calculation based on an ultimate fuel analysis of the fuel being fired.

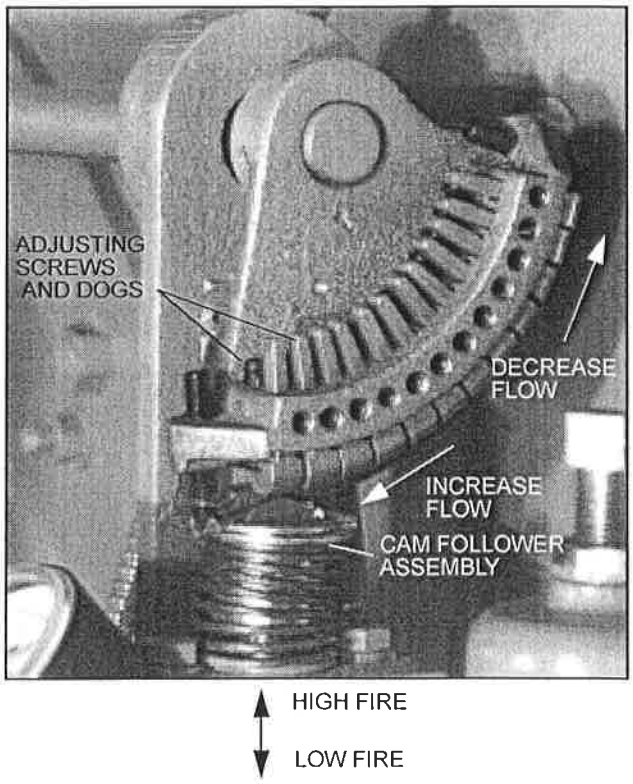

Figure: 6-11 Fuel Modulating Cam

It is generally recommended that O_2 readings of between 3% to 4% be attained with less than 400 ppm CO, at high fire.

Using information from Section P of Chapter 6, determine the standard conditions of gas pressure and flow for the size boiler and the gas train on it. Calculate the actual pressure and flow through the use of correction factors that compensate for incoming gas pressure and altitude.

Basically, gas adjustments are made with a gas pressure regulator, which controls the pressure and with the butterfly gas valve (Figure 6-10) which directly controls the rate of flow.

In initially setting the linkage, back off the low fire stop screw on the butterfly valve so that the valve is closed. Then run the screw out to touch the arm, and give it two complete turns. Adjust the connecting rod so that the override tension is released and so that the arm is now just touching the stop screw. Tighten the locknuts on all ball joints. See Figure 6-10.

The low fire setting should be regarded as tentative until the proper gas pressure for high fire operation is established.

To reach the high fire rate, turn the manual flame control switch toward "OPEN" in minor increments while monitoring combustion for overly rich or lean conditions.

Set and lock the high fire stop screw so that it is just touching the valve arm.

Determine the actual gas flow from a meter reading. (See section P of Chapter 6.) With the butterfly valve open and with regulated gas pressure set at the calculated pressure, the actual flow rate should be close to the required input. If corrections are necessary, increase or decrease the gas pressure by adjusting the gas pressure regulator, following the manufacturer's directions for regulator adjustment.

When proper gas flow is obtained, take a flue gas reading. The O_2 should be between 3% and 4% at high fire.

If the fuel input is correct, but the O_2 values do not fall within this range, the air damper travel may need to be adjusted. Adjustment of the air damper linkage is described in Section B of Chapter 6.

With the high-fire air/fuel ratio established, the gas pressure regulator needs no further adjusting.

After being certain that the air control damper and its linkage are correctly adjusted to provide the proper amount of combustion air, and after adjusting the gas pressure regulator, final adjustment can be made, if necessary, to the gas modulating cam to obtain a constant air/fuel ratio throughout the entire firing range.

Note: Be sure the to loosen the cam foot locking screws before adjusting any cam screws or the cam feet may be damaged.

Since the input of combustion air is ordinarily fixed at any given point in the modulating cycle, the flue gas reading is determined by varying the input of gas fuel at that setting. The adjustment is made to the metering cam by means of adjusting screws, which are turned outward (counterclockwise from the hex-socket end) to increase the flow of fuel, and inward (clockwise from the hex-socket end) to decrease it. Flow rate is highest when the cam follower assembly is closest to jackshaft. See Figure 6-11.

Through the manual flame control switch, position the cam so that the adjusting screw adjacent to the end or high fire screw contacts the cam follower. Perform a combustion analysis at this point. If an adjustment is necessary, turn the adjustment screw accordingly to increase or decrease fuel flow. Take a combustion reading to verify input. Repeat as necessary until the desired flow is obtained. Repeat the process, stopping at each adjusting screw, until the low fire adjusting screw is reached.

Note: Do not use any lubricant on the adjusting setscrews. The set screws have a nylon locking insert intended to provide locking torque and resistance to loosening and a lubricant could damage equipment.

Standard Burner Low Fire Adjustment

The fuel input should be adjusted using the low fire cam screw, to approximately 25% of that at high fire (Table 6-3). At low fire the O_2 flue gas reading should be between 6-7%.

It may be necessary to readjust the setting of the low fire stop screw to obtain the proper air/fuel ratio at the low fire rate. To ensure that the low fire position of the gas butterfly valve is always the same, allow one turn of the stop screw for overtravel.

If the air damper needs to be adjusted in order to provide the correct low fire air/fuel ratio, combustion must be rechecked at higher firing rates and adjusted as required.

If all cam screws are properly adjusted, none will deviate from the general overall contour of the cam face.

R. LOW-GAS-PRESSURE SWITCH

Adjust the scale setting to slightly below the normal burning pressure. The control circuit will be broken when pressure falls below this point. Since gas line distribution pressure may decrease under some conditions, shutdowns may result if the setting is too close to normal. However, regulations require that the setting may not be less than 50% of the rated pressure downstream of the regulator.

Manual resetting is necessary after a pressure drop. Press the reset lever after pressure is restored. Be sure that the mercury switch equipped control is level.

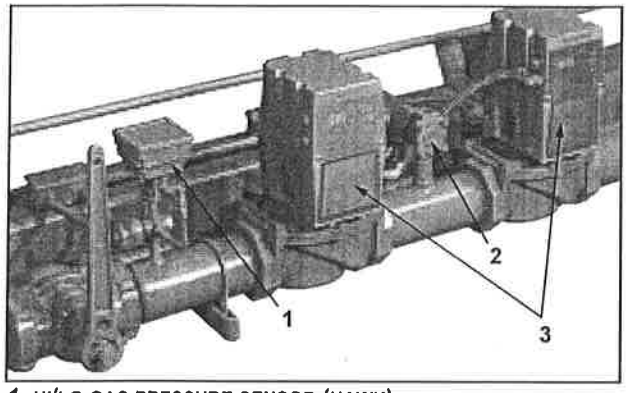

1. HI/LO GAS PRESSURE SENSOR (HAWK)
2. MAIN GAS VENT VALVE
3. MAIN GAS VALVES

Figure: 6-12 Gas Train Pressure Switches

S. HIGH-GAS-PRESSURE SWITCH

Adjust the scale setting to slightly above the normal burning pressure. The control circuit will be broken when pressure exceeds the normal operating pressure. Unnecessary shutdowns may result if the setting is too close to normal; however, regulations require that the setting may not be greater than 150% of rated pressure.

Manual resetting is necessary after a pressure rise. Press the reset lever after pressure falls. Be sure that the mercury switch equipped control is level.

T. FUEL OIL PRESSURE AND TEMPERATURE - GENERAL

Variations in burning characteristics of the fuel oil may occasionally require adjustments to assure highest combustion efficiency. The handling and burning characteristics may vary from one delivery of oil to another. Therefore, it is recommended that the oil system be inspected from time to time to verify that pressures and viscosity are at the proper operating levels.

Because of variation in oils, including chemical content, source, blends, and viscosity characteristics, the temperatures and pressures listed in Chapter 5, and mentioned in the adjusting of the controls in the following paragraphs, will vary and thus may be regarded as tentative and to be changed to provide best firing conditions. Figure 6-13 is an oil viscosity-temperature chart. It may be used as a guide,

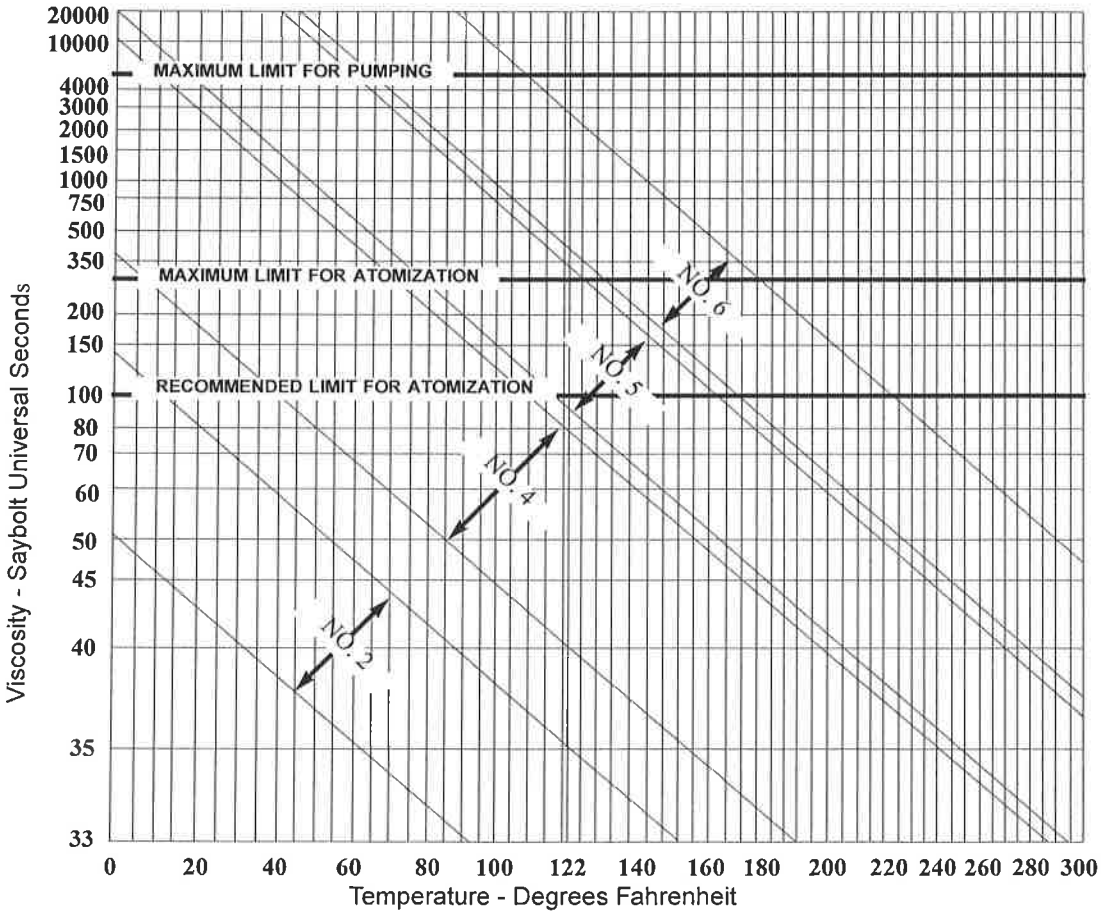

Figure: 6-13 Oil Viscosity Chart

although your oil supplier will be able to give you more exact information based on an analysis of the oil.

Review of the applicable maintenance instructions given in Chapter 8 will aid in maintaining an efficient fuel system.

Note: To prevent oil heater coking, the fuel oil pump must be in operation during all times that an oil heater is in service. During any time that the oil pump is not operating, the oil heating system must be electrically shut down by manually turning the oil heater switch to the "off" position.

When the boiler is shut down, or switched over to gas firing, the pump must operate for a sufficient period of time to cool the oil heater. Similarly, if an electric, steam, or hot water oil heater is removed for servicing, the temperature of the heater should be reduced by circulating oil until it has cooled.

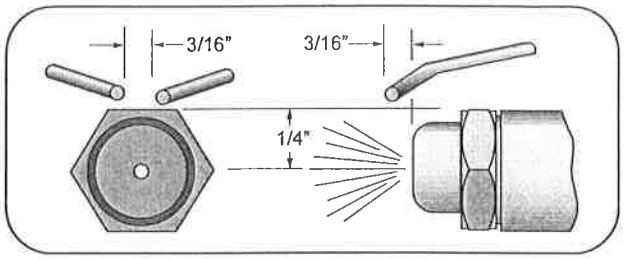

Figure: 6-14 Electrode Setting – Oil Pilot

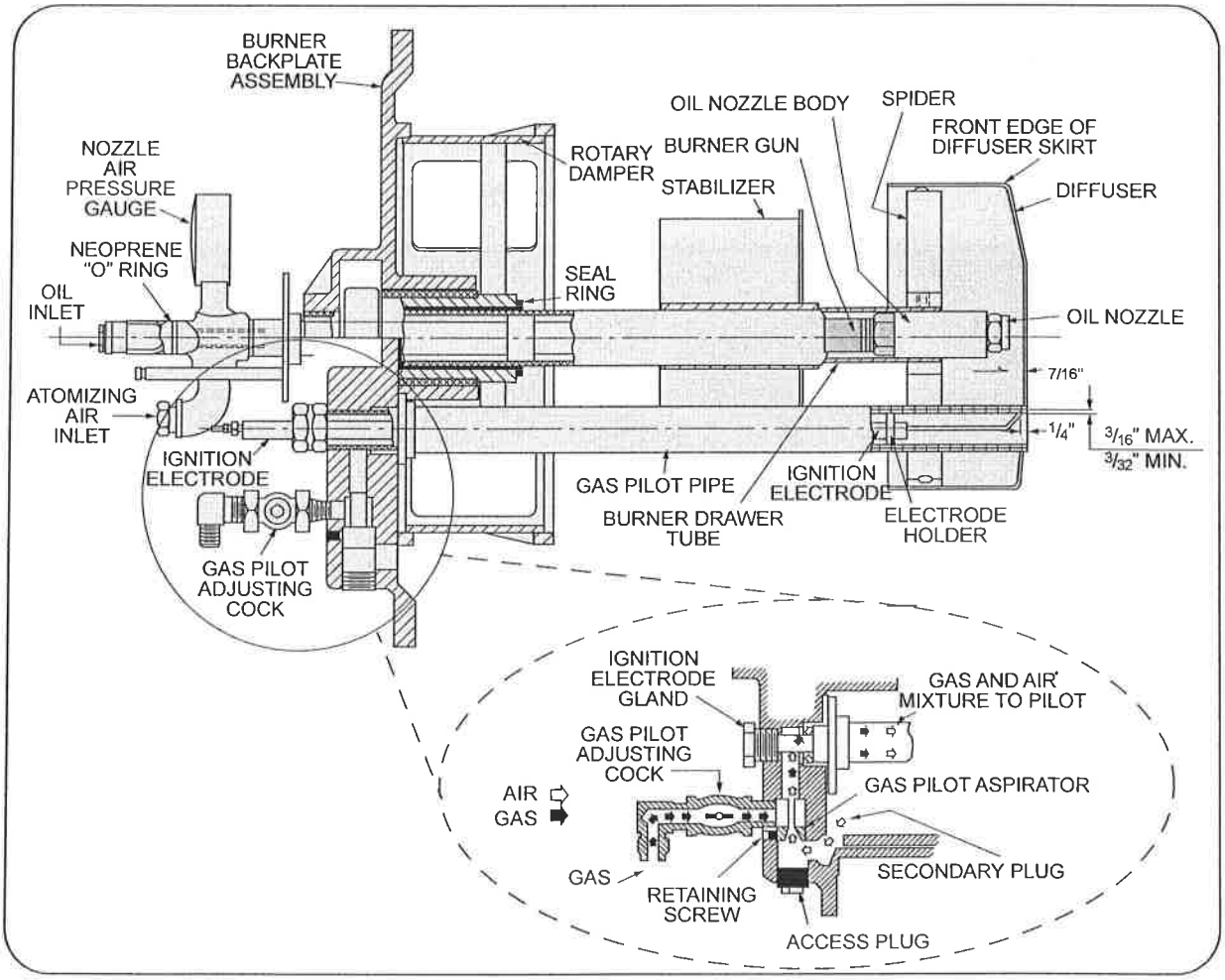

Figure: 6-15 Burner Drawer With Gas Pilot

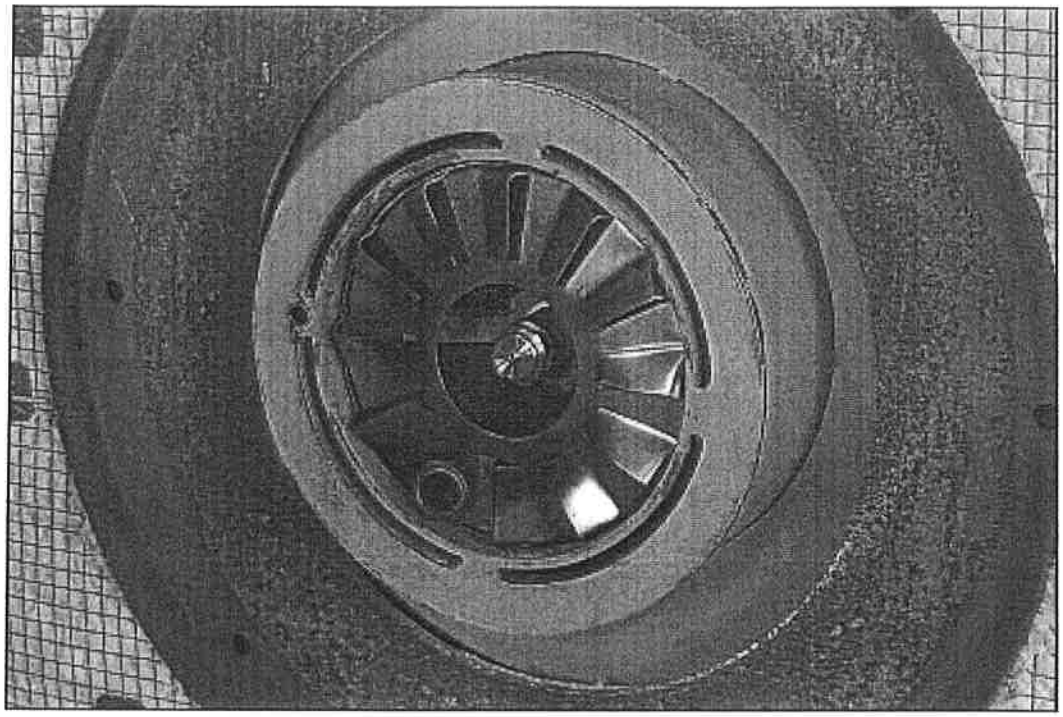

Standard CB Burner Housing

(Rear View, Inside Front Head)

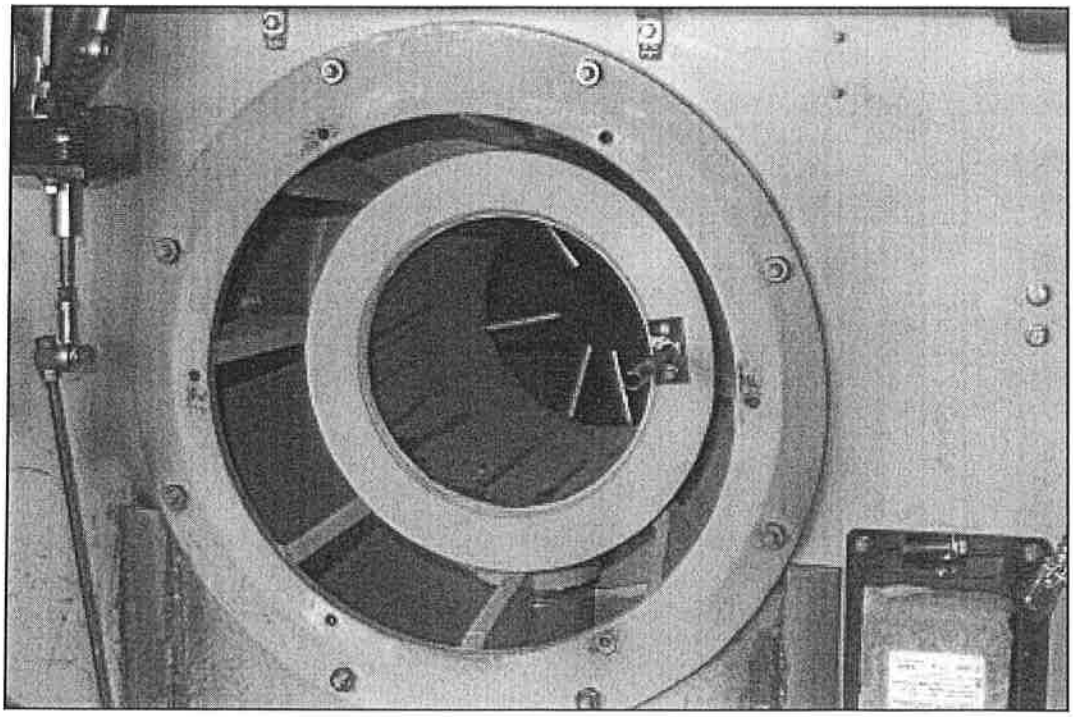

CB-LE Burner Housing

Front View

Figure: 6-16 Burner Housing

U. FUEL OIL COMBUSTION ADJUSTMENT

After operating for a sufficient period of time to assure a warm boiler, adjustments should be made to obtain efficient combustion.

Note: All adjustment should be done by a qualified boiler operator or your local Cleaver-Brooks Service representative.

Burner efficiency is measured by the amount or percentage of O_2 present in the flue gas. O_2 readings determine the total amount or excess air in the combustion process, above the point of stoichiometric combustion or perfect combustion. Stoichiometric combustion however, is the reference point used when setting fuel/air ratios in a boiler.

There must always be excess air in the combustion process to account for changes in boiler room conditions and to ensure the combustion is on the proper side of the combustion curve (See Figure 6-9).

Proper setting of the air/fuel ratios at all rates of firing must be established by the use of a combustion gas analyzer. Efficient combustion cannot be solely judged by flame condition or color, although they may be used in making approximate settings. Combustion settings should be done so that there is a bright sharp flame with no visible haze.

Most flue gas analyzers in use today measure the content, by percentage, of oxygen (O_2) and in some cases, smoke. Carbon dioxide (CO_2) is not normally measured with modern gas analyzers, but may be displayed as a calculation.

The O_2 levels through the entire firing range of the burner, low fire to high fire should be tested. The burner manufactures recommendations on turndown should also be followed and the turndown range of the burner should not be exceeded.

It is required to set the burner to operate with a reasonable amount of excess air to compensate for minor variations in the pressure, temperature, or burning properties of oil. Fifteen to 20% excess air is considered reasonable. This would result in an O_2 reading of 3% to 4%, at high fire.

Final adjustment to fuel input must be made to produce a minimum of smoke. A maximum smoke spot density of a No. 2 for light oil, or a No. 4 for heavy oil is acceptable, as measured in conformance to ASTMD 2156-63T.

Through the use of the manual flame control, slowly bring the unit to high fire by stages while monitoring combustion for overly rich or lean conditions. At the high fire position, the air damper should be fully opened and the air and oil pressure readings should be on the order of the readings given in Chapter 5.

Take a flue gas analysis reading. If necessary, adjust the fuel oil controller to increase or decrease oil pressure. Adjustments to the pressure should be done before attempting to adjust the screws in the metering cam. Ideally, the cam profile spring should be as close to the cam casting as practical. It is more desirable to lower the oil pressure to reduce flow, if necessary, than to extend the adjusting screws to an extreme position in an effort to cut back flow.

After being certain that the air control damper and its linkage are operating properly, final adjustment can be made, if necessary, to the oil modulating cam to obtain a constant fuel/air ratio through the entire firing range.

Note: Be sure the to loosen the cam foot locking screws before adjusting any cam screws or the cam feet may be damaged.

Since the input of combustion air is ordinarily fixed at any given point in the modulating cycle, the flue gas reading is determined by varying the input of fuel at that setting. The adjustment is made to the metering cam by means of adjusting screws, which are turned out (counterclockwise from hex-socket end) to increase the flow of fuel and in (clockwise from hex-socket end) to decrease it. Flow rate is highest when the cam follower assembly is closest to the jackshaft. See Figure 6-11.

If oil pressure, primary air pressure, and linkages are properly adjusted, the metering cam should require minimal adjustment.

Using the flame control switch, position the cam so that the adjusting screw adjacent to the end, high-fire screw, contacts the cam follower. Make a combustion analysis at this point.

If an adjustment is necessary, turn the adjustment screw accordingly to increase or decrease fuel flow. Take a combustion reading to verify input. Repeat as necessary until the desired flow is obtained. Continue this pressure, stopping at each adjusting screw, until the low fire position is reached.

Note: Do not use any lubricant on the adjusting setscrews. These have a nylon locking insert intended to provide locking torque and resistance to loosening and a lubricant could damage the equipment.

Standard Burner Low Fire Adjustment (Heavy Oil)

The fuel input should be adjusted with the low fire cam screw, to approximately 25% of that at high fire. At low fire the O_2 flue gas reading should be between 7- 8%.

V. BURNER DRAWER ADJUSTMENT

There are relatively few adjustments that can be made to the burner; however, a check should be made to assure that all components are properly located, and that all holding screws are properly tightened.The diffuser location on gas fired boilers is quite important. There should be 1/4" distance between the edges of the diffuser fins and gas outlet tubes (spuds)(see Figure 6-16). The setting of an oil fired burner is less exacting and the diffuser should be located with the skirt approximately 1-1/8" from the end of the burner tube.

When the proper diffuser location is ascertained, the setting of the nozzle in relation to the diffuser should be checked. This generally is set at time of manufacture and seldom needs altering. It is most important that oil spray does not impinge upon the diffuser. The distance that the nozzle is behind the diffuser has some latitude, and individual installations may require a slight deviation. Refer to Figure 6-15 for initial setup dimensions.

Check the setting of the ignition electrode(s) for proper gap and position. See Figure 6-15 for the gas pilot electrode and Figure 6-14 for the light oil pilot. Be sure that the porcelain insulator is not cracked and that ignition cable connections are tight.

The oil nozzle tip should be seated tightly in the body with the swirler and the seating spring in place. See Section G in Chapter 8 for additional nozzle tip information.

Check to see that the flame detector sight tube and the gas pilot tube extend through their respective openings in the diffuser face.

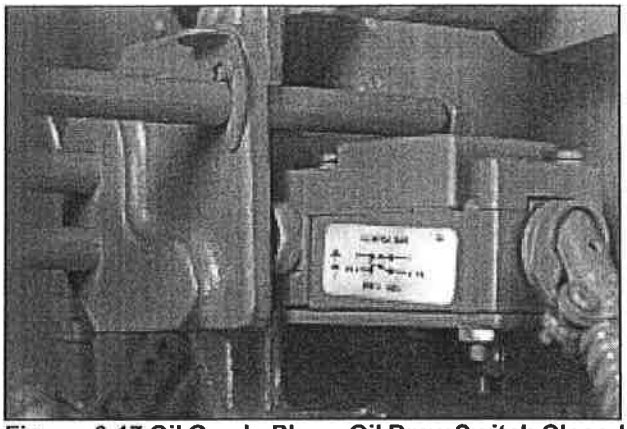

Figure: 6-17 Oil Gun In Place, Oil Draw Switch Closed

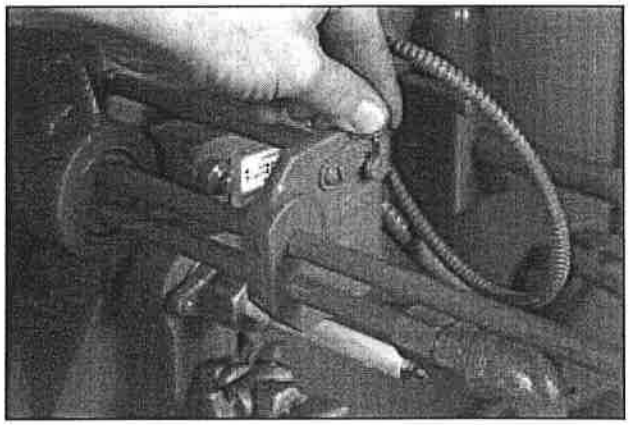

Figure: 6-18 Oil Gun Locked Out

W. OIL DRAWER SWITCH

The integral contacts of the control are closed by proper positioning and latching of the oil drawer in its forward position (Figure 6-17). Adjustment of the switch must be such that its contacts open if the oil drawer is not properly positioned for oil firing. The switch is electrically removed from the circuit when a combination fuel burner is fired on gas (Figure 6-18).

X. LOW-OIL-TEMPERATURE SWITCH

The L.O.T.S. prevents the burner from starting, or stops its operation, if the temperature of the oil is below normal operating temperature.

To adjust the control, insert a screwdriver into the center slot in the control cover and turn the dial until the fixed (center) pointer is approximately 30°F lower than the oil heater thermostat setting. Turn the differential adjusting screw (located above dial) until the movable indicator is approximately 5° F above the setting on the main scale.

On a hot water boiler, the low-oil-temperature switch is an integral part of the electric oil heater. The switch is non-adjustable and is factory set at approximately 40° F below the maximum operating temperature of the heater.

Y. HIGH-OIL-TEMPERATURE SWITCH

The H.O.T.S. prevents the burner from starting, or stops its operation, if the temperature of the oil exceeds the normal operating temperature.

To adjust, turn the dial until the pointer is approximately 25° F above the normal operating temperature. The controls generally have a set differential and will close 5° F below the setpoint.

Z. LOW OIL PRESSURE SWITCH

The L.O.P.S. prevents burner ignition, or stops its operation, when the oil pressure is below the set point. Adjust the control by turning the screw on top of control case to an indicated pressure 10 psi below the established primary oil pressure setting indicated on the oil supply pressure gauge. The switch will remain in a closed position as long as the oil pressure exceeds this setting. The control normally used automatically resets when pressure is restored after a drop.

AA. ELECTRIC OIL HEATER THERMOSTAT (400 and 600 Series - Steam)

The maximum temperature setting of the control is stamped on the dial. The maximum Temperature setting is attained with the adjusting knob turned to the "high" end of the scale. Lower settings are obtained by turning the adjusting knob clockwise using the thermometer in the fuel oil controller as a guide.

The final setting of this thermostat should be at a temperature approximately 15° F lower than the steam heater thermostat. This eliminates the electric heater operation when the steam heater is functioning. The electric heater is sized to provide sufficient heated oil for low-fire operation on cold starts before steam is available.

BB. STEAM OIL HEATER THERMOSTAT (No. 6 Oil) (400 and 600 Series - Steam)

The maximum temperature setting of the control is stamped on the dial. The maximum temperature setting is attained with the adjusting knob turned to the "high" end of the scale. Lower settings are obtained by turning the adjusting knob clockwise using the thermometer in the fuel oil controller as a guide.

The final setting of the thermostat should provide oil at a sufficient temperature for efficient combustion based on flue gas analysis. There is no need to heat the oil in excess of the temperature.

CC. HOT WATER OIL HEATER THERMOSTAT (400 and 600 Series)

To adjust the thermostat, insert a screwdriver into the center slot in the control cover and turn the dial until the pointer is at the desired temperature level. The control generally has a set differential, and will close 5°F below the setpoint.

The thermostat contacts close to energize the booster water pump, which pumps water from the boiler through the heater. On cold starts, it is normal practice to manually close the valve in the pump discharge line until the boiler water temperature exceeds the temperature of fuel oil entering the heater.

The electric oil heater on a hot water boiler burning No. 6 oil and equipped with a hot water oil heater has a built-in adjustable thermostat. The maximum temperature setting is stamped on its dial. The desired temperature can be obtained by turning the adjusting screw. The thermostat should be set at a temperature approximately 15 degrees lower than the hot water heater thermostat. Such a temperature prevents the electric heater from operation when the water heater is functioning. The electric heater is sized to provide sufficient heated oil for low-fire operation on cold starts before hot water is available.

DD. STEAM HEATER PRESSURE REGULATOR (400 and 600 Series - Steam)

The regulator is provided on a boiler designed to operate at pressures above 15 psi and reduces boiler steam pressure to the level necessary for proper operation of the steam oil heater. The pressure should be reduced to a point that permits sufficient temperature to heat the oil, while allowing as continuous a steam flow as possible. Pressure that is too high will result in frequent cycling of the steam solenoid valve.

It is best to adjust the regulator under typical flow conditions. To do so, it is suggested that the globe valve in the steam supply line be closed so that there is no pressure on the regulator. Turn out the adjusting screw fully to relieve compression on the regulator spring, thus closing the regulator. With steam at normal pressure, open the globe valve and then set the secondary pressure by turning the adjusting screw or handle until the downstream gauge shows the desired pressure.

Notes

CHAPTER 7

TROUBLE SHOOTING

⚠WARNING

Trouble shooting should be performed only by personnel who are familiar with the equipment and who have read and understand the contents of this manual. Failure to follow these instructions could result in serious personal injury or death

⚠WARNING

Disconnect and lock out the main power supply in order to avoid the hazard of electrical shock.Failure to follow these instructions could result in serious personal injury or death

Note: If your boiler is equipped with a CB-HAWK™ boiler management control system, refer to CB-HAWK Installation, Operating and Servicing Manual No. 750-133 for specific information regarding procedures described in this section

Chapter 7 assumes that the unit has been properly installed and adjusted, and that it has been running for some time. It is further assumed that the operator has become thoroughly familiar with both burner and manual by this time. The points under each heading are set down briefly as possible causes, suggestions or clues to simplify locating the source of trouble. Methods of correcting the trouble, once it has been identified, may be found elsewhere in this manual.

If the burner will not start or operate properly, the trouble shooting Chapter should be referred to for assistance in pinpointing problems that may not be readily apparent.

The program relay has the capability to self-diagnose and to display a code or message that indicates the failure condition. Refer to the control bulletin for specifics and suggested remedies.

Familiarity with the programmer and other controls in the system may be obtained by studying the contents of this manual. Knowledge of the system and its controls will make trouble shooting much easier. Costly down-time or delays can be prevented by systematic checks of actual operation against the normal sequence to determine the stage at which performance deviates from normal. Following a routine may possibly eliminate overlooking an obvious condition, often one that is relatively simple to correct.

If an obvious condition is not apparent, check the continuity of the circuits with a voltmeter or test lamp. Each circuit can be checked and the fault isolated and corrected. Most circuitry checking can be done between appropriate terminals on the terminal boards in the control cabinet or the entrance box. Refer to the schematic wiring diagram for terminal identification.

Problem	Solution
BURNER DOES NOT START	1. No voltage at program relay power input terminals. A. Main disconnect switch open. B. Blown control circuit fuse. C. Loose or broken electrical connection.
	2. Program relay safety switch requires resetting.
	3. Limit circuit not completed—no voltage at end of limit circuit program relay terminal. A. Pressure or temperature is above setting of operation control. (Load demand light will not glow.) B. Water below required level. 1). Low-water light (and alarm horn)should indicate this condition. 2). Check manual reset button, if provided, on low-water control. C. Fuel pressure must be within settings of low pressure and high pressure switches. D. Oil fired unit - burner gun must be in full forward position to close oil drawer switch. E.) Heavy oil fired unit - oil temperature below minimum settings.
	4. Fuel valve interlock circuit not completed. A. Fuel valve auxiliary switch not enclosed.

NO IGNITION	1. Lack of spark. A. Electrode grounded or porcelain cracked. B. Improper electrode setting. C. Loose terminal on ignition cable; cable shorted. D. Inoperative ignition transformer. E. Insufficient or no voltage at pilot ignition circuit terminal.
	2. Spark but no flame. A. Lack of fuel - no gas pressure, closed valve, empty tank, broken line, etc. B. Inoperative pilot solenoid. C. Insufficient or no voltage at pilot ignition circuit terminal. D. Too much air.
	3. Low fire switch open in low fire proving circuit. A. Damper motor not closed, slipped cam, defective switch. B. Damper jammed or linkage binding.

Problem	Solution
	4. Running interlock circuit not completed. A. Combustion or atomizing air proving switches defective or not properly set. B. Motor starter interlock contact not closed.
	5. Flame detector defective, sight tube obstructed, or lens dirty.

PILOT FLAME, BUT NO MAIN FLAME	1. Insufficient pilot flame.
	2. Gas Fired Unit. A. Manual gas cock closed. B. Main gas valve inoperative. C. Gas pressure regulator inoperative.
	3. Oil fired unit. A. Oil supply cut off by obstruction, closed valve, or loss of suction. B. Supply pump inoperative. C. No fuel. D. Main oil valve inoperative. E. Check oil nozzle, gun and lines.
	4. Flame detector defective, sight tube obstructed or lens dirty.
	5. Insufficient or no voltage at main fuel valve circuit terminal.

BURNER STAYS IN LOW FIRE	1. Pressure or temperature above modulating control setting.
	2. Manual-automatic switch in wrong position.
	3. Inoperative modulating motor (see Section F).
	4. Defective modulating control.
	5. Binding or loose linkage, cams, setscrews, etc.

SHUTDOWN OCCURS DURING FIRING	1. Loss or stoppage of fuel supply.
	2. Defective fuel valve; loose electrical connection.
	3. Flame detector weak or defective.
	4. Lens dirty or sight tube obstructed.
	5. If the programmer lockout switch has not tripped, check the limit circuit for an opened safety control.

	6. If the programmer lockout switch has tripped: A. Check fuel lines and valves. B. Check flame detector. C. Check for open circuit in running interlock circuit. D. The flame failure light is energized by ignition failure, main flame failure, inadequate flame signal, or open control in the running interlock circuit.

Problem	Solution
SHUTDOWN OCCURS DURING FIRING	7. Improper air/fuel ratio (lean fire). A. Slipping linkage. B. Damper stuck open. C. Fluctuating fuel supply. 1). Temporary obstruction in fuel line. 2). Temporary drop in gas pressure. 3). Orifice gate valve accidentally opened (heavy oil). 8. Interlock device inoperative or defective.

MODULATING MOTOR DOES NOT OPERATE	1. Manual-automatic switch in wrong position.
	2. Linkage loose or jammed.
	3. Motor does not drive to open or close during pre-purge or close on burner shutdown. A. Motor defective. B. Loose electrical connection. C. Damper motor transformer defective.
	4. Motor does not operate on demand. A. Manual/automatic switch in wrong position. B. Modulating control improperly set or inoperative. C. Motor defective. D. Loose electrical connection. E. Damper motor transformer defective.

CHAPTER 8

Inspection and Maintenance

A. General 8-1
B. Fireside Cleaning 8-2
C. Water Level Controls and Waterside 8-2
D. Water Gauge Glass 8-3
E. Electrical Controls 8-3
F. Flame Safety Control 8-4
G. Oil Burner Maintenance 8-5
H. Gas Burner Maintenance 8-7
I. Motorized Gas Valve 8-7
J. Solenoid Valves 8-7
K. Air Control Damper, Linkage and Cam Spring 8-7
L. Forced Draft Fan 8-8
M. CB-LE Fan/Motor Cassette Removal 8-9
N. CB-LE Inspection and Adjustment 8-10
O. CB-LE Airbox Gasket Installation 8-12
P. CB-LE Fan/Motor Cassette Installation 8-12
Q. Safety Valves 8-19
R. Fuel Oil Metering Valve 8-19
S. Air Pump and Lubricating System 8-20
T. Head Inspection and Maintenance 8-23
U. Refractory 8-25
V. Sealing and Closing Inner Door and Front Head 8-27
W. Lubrication 8-31
X. Oil Heaters—Electric, Steam, Hot Water 8-32
Y. Combustion 8-32
Z. Air Pump Belt 8-32

Note: For more information on your flame safeguard system, refer to the appropriate manual that was provided with your boiler

⚠ CAUTION

Inspection and maintenance should be performed only by trained personnel who are familiar with this equipment. Failure to follow these instructions could result in equipment damage.

A. GENERAL

A well-planned maintenance program will help avoid unnecessary down-time or costly repairs, promote safety, and aid boiler inspectors. An inspection schedule with a listing of procedures should be established. It is recommended that a boiler room log or record be maintained. Recording of daily, weekly, monthly, and yearly maintenance activities provides a valuable guide and aids in obtaining economical and lengthy service from Cleaver-Brooks equipment. A boiler inspection schedule is shown in Figure 8-44. It is important to realize that the frequency of inspection will depend on variable conditions such as load, fuel, system requirements, boiler environment (indoor/outdoor), etc.

Good housekeeping helps maintain a professional appearing boiler room. Only trained and authorized personnel should be permitted to operate, adjust, or repair the boiler and its related equipment. The boiler room should be kept free of all material and equipment not necessary to the operation of the boiler or heating system.

Even though the boiler has electrical and mechanical devices that make it automatic or semi-automatic in operation, the devices require systematic and periodic maintenance. Any automatic feature does not relieve the operator from responsibility, but rather frees the operator from certain repetitive chores providing time to devote to upkeep and maintenance.

Alertness in recognizing an unusual noise, improper gauge reading, leaks, etc., can make the operator aware of a developing malfunction and permit prompt corrective action that may prevent extensive repairs or unexpected downtime. Any leaks - fuel, water, steam, exhaust gas - should be repaired promptly and under conditions that observe necessary safety precautions. Preventive maintenance measures, such as regularly checking the tightness of connections, locknuts, setscrews, packing glands, etc., should be included in regular maintenance activities.

Periodic Inspection

Insurance regulations and local laws require periodic inspection of the pressure vessel by an authorized inspector. Section H of Chapter 3 contains information relative to the inspection.

Inspections are usually, though not necessarily, scheduled for periods of normal boiler down time, such as an off season. This major inspection can often be used to accomplish maintenance, replacement, or repairs that cannot easily be done at other times. Inspection also serves as a good basis for establishing a schedule for annual, monthly, or other periodic maintenance programs.

While the inspection pertains primarily to the waterside and fireside surfaces of the pressure vessel, it provides the operator an excellent opportunity for detailed inspection and

check of all components of the boiler including piping, valves, pumps, gaskets, refractory, etc. Comprehensive cleaning, spot painting or repainting, and the replacement of expendable items should be planned for and taken care of during this time. Any major repairs or replacements that may be required should also, if possible, be coordinated with the period of boiler shutdown.

Replacement spare parts, if not on hand, should be ordered sufficiently prior to shutdown.

Note: Cleaver-Brooks genuine parts should be used to ensure proper operation. Contact your local Cleaver-Brooks representative for parts information and ordering.

Cleaver-Brooks boilers are designed, engineered, and built to provide long life and excellent service. Good operating practices and conscientious maintenance and care will assure efficiency and economy from their operation, and will contribute to many years of performance.

A total protection plan includes a Planned Maintenance Program that covers many of the items included in this chapter.

For information regarding a total protection plan, contact your local Cleaver-Brooks authorized representative.

B. FIRESIDE CLEANING

Soot and non-combustibles are effective insulators, and, if allowed to accumulate, will reduce heat transfer to the water and increase fuel consumption. Soot and other deposits can be very moisture-absorbent, and may attract moisture to form corrosive acids that will deteriorate fireside metal.

Clean-out should be performed at regular and frequent intervals, depending upon load, type, and quality of fuel, internal boiler temperature, and combustion efficiency. A stack temperature thermometer can be used as a guide to clean-out intervals since an accumulation of soot deposits will raise the flue gas temperature.

Tube cleaning is accomplished by opening the front and rear doors. Tubes may be brushed from either end. All loose soot and accumulations should be removed. Any soot, or other deposits, should be removed from the furnace and tube sheets.

Refer to Section U of Chapter 8 for instructions on properly closing rear heads.

The flue gas outlet and stack should be inspected annually and cleaned as necessary. Commercial firms are available to perform the work. The stack should be inspected for damage and repaired as required.

The fireside should be thoroughly cleaned prior to any extended lay-up of the boiler. Depending upon circumstances, a protective coating may be required. See Section I in Chapter 3.

C. WATER LEVEL CONTROLS

The need to periodically check water level controls and the waterside of the pressure vessel cannot be overemphasized. Most instances of major boiler damage are the result of operating with low water, or the use of untreated (or incorrectly) treated water.

Always be sure of the boiler water level. On steam boilers, the water column should be blown down daily. Check samples of boiler water and condensate in accordance with procedures recommended by your local Cleaver-Brooks authorized representative. Refer to Sections G and H in Chapter 3 for blowdown instructions and internal inspection procedures.

Since low water cutoff devices are generally set by the original manufacturer, no attempt should be made to adjust these controls to alter the point of low water cutoff or point of pump cut-in or cut-out. If a low water device should become erratic in operation, or if its setting changes from previously

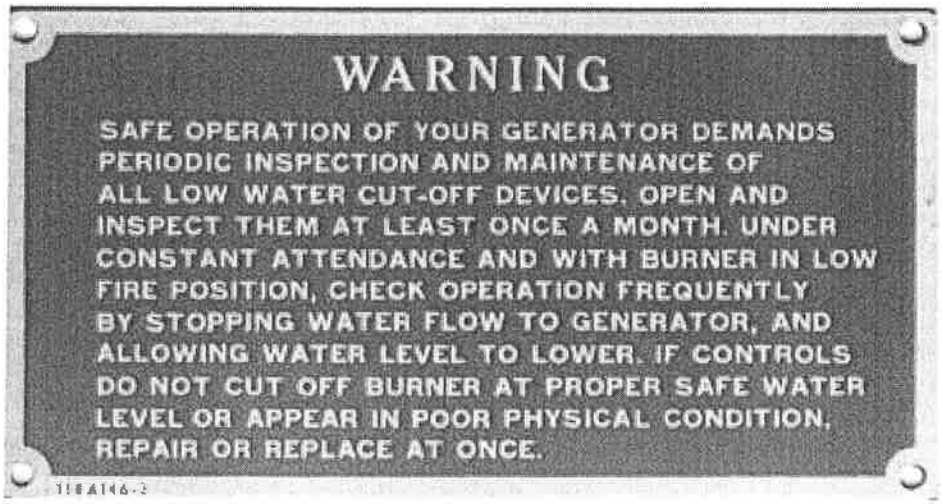

Figure: 8-1 Low-Water Plate

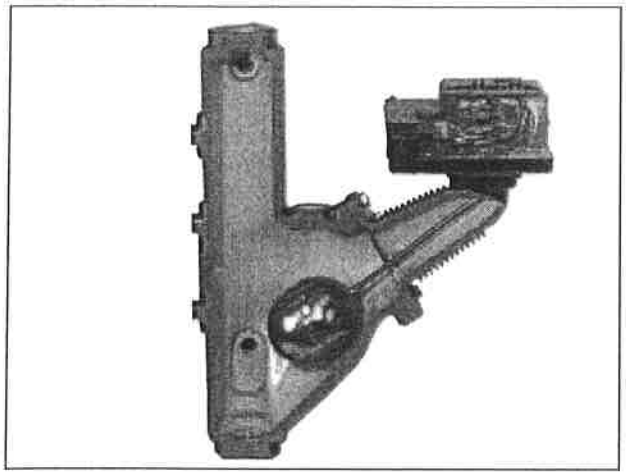

Figure 8-2: Low Water Cutoff - Cutaway

established levels, contact your local Cleaver-Brooks authorized representative.

Steam Boiler

Figure 8-1 shows the low water cutoff plate which is attached to a steam boiler. The instructions should be followed on a definite schedule. The controls normally function for long periods of time, which may lead to laxity in testing on the assumption that normal operation will continue indefinitely.

On a steam boiler, the head mechanism of the low water cutoff device(s) should be removed from the bowl at least semi-annually to check and clean the float ball, the internal moving parts, and the bowl or water column. Figure 8-2 shows a cutaway of the low water cutoff.

Remove the pipe plugs from the tees or crosses and make certain the cross-connecting piping is clean and free of obstructions. Controls must be mounted in a plumb position for proper performance. Determine that piping is vertically aligned after shipment and installation and throughout life of equipment.

A blowdown of the water controls on a steam boiler should be performed daily.

Hot Water Boiler

It is impractical to blowdown the low water cutoff devices on a hot water boiler since the entire water content of the system would become involved. Many hot water systems are fully closed and any loss of water will require make-up and additional feedwater treatment that might not otherwise be necessary. Since the boiler and system arrangement usually make it impractical to perform daily and monthly maintenance of the low water cutoff devices, it is essential to verify proper operation. Remove the operating mechanism from the bowl annually or more frequently, if possible, to check and clean float ball, internal moving parts, and the bowl housing. Also check the cross-connecting piping to be certain that it is clean and free of obstruction.

D. WATER GAUGE GLASS

A broken or discolored glass should be replaced at once. Periodic replacement should be a part of the maintenance program. Always use new gaskets when replacing a glass. Use a proper size rubber packing. Do not use loose packing, which could be forced below the glass and possibly plug the valve opening.

Close the valves when replacing the glass. Slip a packing nut, a packing washer, and packing ring onto each end of the glass. Insert one end of the glass into the upper gauge valve body far enough to allow the lower end to be dropped into the lower body. Slide the packing nuts onto each valve and tighten.

⚠WARNING

Do not attempt to change the gauge glass while the boiler is in service. Failure to follow these instructions could result in serious personal injury or death.

Check try-cocks and gauge cocks for freedom of operation and clean as required. It is imperative that the gauge cocks are mounted in exact alignment. If they are not, the glass will be strained and may fail prematurely.

E. ELECTRICAL CONTROLS

The operating controls should be inspected monthly. Examine tightness of electrical connections and keep the controls clean. Remove any dust that accumulates in the interior of the control using a low pressure air. Take care not to damage the mechanism.

Examine any mercury tube switches for damage or cracks. Dark scum over the normally bright surface of the mercury, may lead to erratic switching action. Be certain that controls are correctly leveled. The piping leading to the pressure control actuators should be cleaned, if necessary. Covers should be left on controls at all times.

Dust and dirt can cause excessive wear and overheating of motor starter and relay contacts. Use a burnishing tool or a hard surface paper to clean and polish contacts. Starter contacts are plated with silver and are not harmed by discoloration and slight pitting. Replacement of the contacts is necessary only if the silver has worn thin.

BLOWER MOTOR FUSE SIZING

ELECTRICAL LOAD MOTOR HP	SINGLE PHASE 50/60 HERTZ		THREE PHASE 50/60 HERTZ				
	110-120 V	220-240 V	200-208 V	220-240 V	346-416 V	440-480 V	550-660 V
1/4	10	5-6/10	1-8/10	1-8/10		1	8/10
1/3	12	6-1/4	1-8/10	1-8/10		1	8/10
1/2	17-1/2	9	4-1/2	4	2	2	1-6/10
3/4	20	10	7	5-6/10	3-2/10	2-8/10	2-1/4
1	25	12	9	8	4-1/2	4	3-2/10
1-1/2	35	17-1/2	12	10	6-1/4	5-6/10	4-1/4
2	40	20	15	12	7	6-1/4	5
3	60	30	20	17-1/2	10	9	7
5		50	30	30	15	15	12
7-1/2		60	40	40	20	20	17-1/2
10		90	60	50	30	25	20
15			80	60	45	40	30
20			110	80	50	50	40
25			125	100	60	60	50
30			175	125	70	70	60
40			200	175	100	80	70
50			300	200	125	100	80
60			350	300	175	150	110
75			400	350	200	175	150
100			500	400	250	200	175
125			600	500	300	300	200
150				600		350	250

FUSE SIZES ABOVE ARE CLASS RK5 DUAL ELEMENT, TIME DELAY.

TABLE AT RIGHT SHOWS VENDOR TYPES

	BUSSMAN	GOULD	LITTELFUSE
0-250 V	FRN	TR	FLN
251-600 V	FRS	TRS	FLS

Figure 8-3: Recommended Maximum "Fusetron" Fuse Sizes

⚠ CAUTION

Do not use files or abrasive materials such as sandpaper on the contact points. Failure to follow these instructions could result in equipment damage.

Thermal relay units (overloads) are of the melting-alloy type and, when tripped, the alloy must be given time to re-solidify before relay can be reset. If the overloads trip out repeatedly when the motor current is normal, replace them with new overloads. If the condition continues after replacement, it will be necessary to determine the cause of excessive current draw at the overloads.

Power supply to the boiler must be protected with dual element fuses (fusetrons) or circuit breakers. Similar fuses should be used in branch circuits. Standard one-shot fuses are not recommended. Information given in Figure 8-3 is included for guidance to fuse requirements.

F. FLAME SAFETY CONTROL

The microprocessor based control requires minimal maintenance because the safety and logic timings are inaccessible. There also are not any accessible contacts. Check to see that the retaining screw is securely holding the chassis to the mounting base. Also check to see that the amplifier and the program module are tightly inserted.

The relay's self-diagnostic ability includes advising when it or its plug-in modules are at fault and require replacement.

Your spare control should be stored in a dry atmosphere and wrapped in plastic. During an extended shutdown (e.g., seasonal), the active control should be removed and stored. Moisture can cause problems with control operation.

It is recommended that service be rotated between the active and a spare control to assure a working replacement is available.

⚠WARNING

When replacing a control, be sure to lock out the main power supply switch since the control is "hot" even though the burner switch is off. Failure to follow these instructions could result in serious personal injury or death.

Be sure the connecting contacts on the control and its base are not bent out of position.

The flame detector lens should be cleaned as often as operating conditions demand. Use a soft cloth moistened with detergent to clean the lens.

A safety check procedure should be established to test the complete safeguard system at least once a month, or more often. Tests should verify safety shutdown and a safety lockout upon failure to ignite the pilot, upon failure to ignite the main flame, and upon loss of flame. Each of the conditions should be checked on a scheduled basis.

The following tests should be used to test the complete safeguard system. If the sequence of events is not as described, then a problem may exist. Contact your local Cleaver-Brooks authorized representative for assistance.

Checking Pilot Flame Failure

Close the gas pilot shutoff cock (Figure 2-11). Also shut off the main fuel supply. Turn the burner switch "on."

The pilot ignition circuit will be energized at the end of the pre-purge period. There should be an ignition spark, but no flame. Since there is no flame to be detected, the program relay will signal the condition. The ignition circuit will deenergize and the control will lock out on a safety shutdown. The flame failure light (and optional alarm) will be activated. The blower motor will run through the post-purge and stop.

Turn the burner switch off. Reset the safety switch. Reopen the gas pilot shutoff cock and re-establish main fuel supply.

Checking Failure to Light Main Flame

Leave the gas pilot shutoff cock open. Shut off the main burner fuel supply. Turn the burner switch on. The pilot will light upon completion of the pre-purge period. The main fuel valve(s) will be energized, but there should be no main flame.

The fuel valve(s) deenergize within 4 seconds after the main burner ignition trial ends. The control will lock out on a safety shutdown. The flame failure light (and optional alarm) will be activated. The blower motor will run through the post-purge and stop.

Turn the burner switch off. Reset the safety switch. Re-establish main fuel supply.

Checking Loss of Flame

With the burner in normal operation, shut off the main burner fuel supply to extinguish main flame.

The fuel valve(s) will be deenergized and the relay will signal the condition within 4 seconds. The control will then lock out on a safety shutdown. The flame failure light (and optional alarm) will be activated. The blower motor will run through the post-purge and stop.

Turn the burner switch off. Reset the safety switch. Re-establish main fuel supply.

G. OIL BURNER MAINTENANCE

The burner should be inspected for evidence of damage due to improperly adjusted combustion. Any soot buildup on the diffuser or the oil nozzle should be removed. The setting of the oil nozzle in relation to the diffuser and other components is important for proper firing and should be checked.

Oil Strainers

Oil strainers should be cleaned frequently to maintain a free and full flow of fuel.

Light Oil Strainers

The fuel oil strainer screen must be removed and cleaned at regular intervals. It is advisable to remove the screen each month and clean thoroughly by immersing it in solvent and blowing it dry with compressed air. To remove, loosen the cover cap screw, being careful not to lose the copper gasket. If necessary, tap the strainer cover gently to loosen. Check the cover gasket for damage and replace if necessary. Slip pliers into the cross on the top of the strainer and twist counter-clockwise to remove the basket. Reassemble in reverse order.

Heavy Oil Strainers

Keep the cartridge of the oil strainer clear by regularly giving the exterior handle one complete turn in either direction. Do this often until experience indicates cleaning frequency necessary to maintain optimum conditions of flow. If the handle turns hard, rotate the handle back and forward until it can be turned through a complete revolution. Do not force it with a wrench or other tool.

Drain the sump as often as experience indicates the necessity. Remove the sump, or the head and cartridge assembly, for thorough cleaning and inspection at frequent intervals. Exercise care not to damage the cartridge discs or the cleaner blades. Wash the cartridge in solvents. Do not attempt to disassemble the cartridge.

Cleaning Oil Nozzle

The design of the burner, together with the oil purge system on a heavy oil burner, make it unnecessary to clean the oil nozzle during periods of operation. A routine check and any necessary cleaning should be made during off periods or when the burner is firing on gas.

If at any time the burner flame appears "stringy" or "lazy," it is possible that the nozzle tip or swirler has become partially clogged or worn. Any blockage within the tip will cause the air pressure gauge to increase above its normal value.

Disassemble with the power off by unlatching and withdrawing the burner gun. Insert the nozzle body into the hanger vice and use the spanner wrench to remove the tip. Remove the swirler and seating spring being careful not to drop or damage any parts. See Figure 8-4.

Perform any necessary cleaning with a suitable solvent. Use a soft fiber brush or pointed piece of soft wood for cleaning. Do not use wire or a sharp metallic object, which could scratch or deform the orifices as well as the precision ground surfaces of the swirler and tip. Inspect for scratches or signs of wear or erosion, which may make the nozzle unfit for further use. Take the necessary precautions in working with solvents.

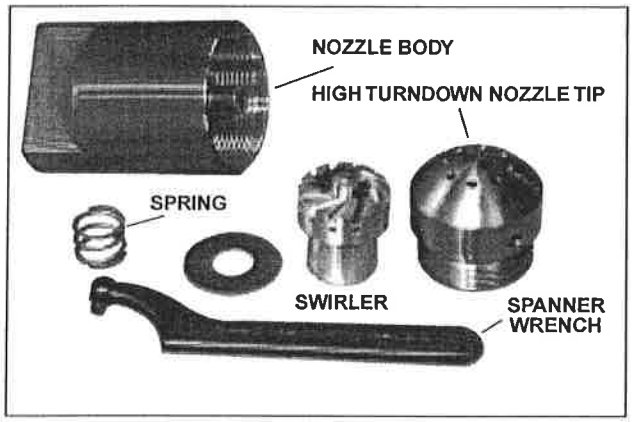

Figure 8-4: Burner Nozzle Components

The tip and swirler are a matched set, which are precision lapped at the time of assembly. The close fit of the lapped surfaces must be maintained in order to provide optimum performance. Additional lapping may be required to provide better atomization for more efficient combustion. Do not interchange parts if a spare is kept. In reassembling, be certain that the seating spring is in place and that it is holding the swirler tightly against the tip. The swirler is stationary and does not rotate, but rather imparts a swirling motion to the oil.

See that the plugged hole is at the bottom of the nozzle body when the gun is installed.

Cleaning Air Purge Nozzle (No. 6 Oil) and Back Pressure Orifice Nozzle (No. 2 Oil)

The air purge nozzle and its strainer should be inspected periodically and cleaned. The nozzle consists of a tip and internal core. Clean all internal surfaces of the tip and the slotted parts of the core using a wood splinter to avoid damage from scratching. Replace the core, setting it tightly but not excessively.

Clean the strainer screen carefully to remove any foreign matter. Use suitable solvents in cleaning. Extremely hot water at high velocity is also helpful in cleaning. Replace strainer by screwing it into the nozzle body only finger tight. Do not use an orifice of a size other than originally installed.

Ignition System

For best results, maintain the proper gap and dimensions of the ignition electrode(s). Figures 6-14 & 6-15 show the proper settings.

Inspect the electrode tip for signs of pitting or combustion deposits and dress as required with a fine file. Inspect the porcelain insulator (s) for any cracks that might be present. If there are cracks, replace the electrode since they can cause grounding of the ignition voltage. Since carbon is an electrical conductor, it is necessary to keep the insulating portion of electrode(s) wiped clean if any carbon is present. Ammonia will aid in removing carbon or soot.

Check ignition cables for cracks in the insulation. Also see that all connections between the transformer and the electrodes are tight.

H. GAS BURNER MAINTENANCE

The gas burner components should be inspected for evidence of damage due to improperly adjusted combustion. Combustion adjustments should be checked monthly. See Section Q in Chapter 6.

Check periodically for a proper seal between the end of the burner housing and boiler refractory (See Figure 8-8). Any deterioration of the seal should be corrected, as an improper or poor seal allows air leaks, which can cause overheating or burning of the burner housing.

Whenever the burner is removed, the diffuser, gas housing and gas spuds (HTB model only) should be checked for any deterioration. Verify that the diffuser skirt conforms to the bore of the burner housing so as to minimize the amount of combustion air which bypasses the diffuser. If the burner is a high turndown burner (HTB) model, check to see that the diffuser is properly located in reference to the gas spuds. There should be 1/4" between the edge of the diffuser fins and the gas spuds when the burner is installed. Check to see that the diffuser fins do not interfere with the gas ports or gas spuds in the burner housing (see Figure 6-16). See Section V in Chapter 6 for more information.

Check the electrode setting for any cracks that might be present on the porcelain insulator. Replace the electrode if cracking is evident, since cracking can cause grounding of the ignition voltage. Inspect the tip of the electrode for signs of pitting, combustion deposits and wear, and dress as required with a fine file. See Figure 6-15 for electrode settings.

Periodically remove the access plug from the gas pilot aspirator (see Chapter 6, Figure 6-15) and clean out any accumulated lint or other foreign material.

Check the ignition cables for cracks in the insulation. Verify that all connections between the transformer and the electrode are tight.

I. MOTORIZED GAS VALVE

The motorized gas valve (Hydramotor) operating mechanism is completely immersed in oil and little maintenance is required because of the sealed design. However, proper operation should be checked on a routine periodic basis.

Keep outer parts of the valve clean, especially the stem between the operator and the valve. A nicked, scored or otherwise damaged valve stem can cause leakage. Do not remove dust covers if installed.

The packing gland is of the O-ring type. If oil is noticed around the operator base or if leakage occurs, repair by replacing any leaking O-rings and refilling the actuator with oil.

If the actuator is sluggish or fails to operate, even after the oil level is checked, replace the entire operator portion.

J. SOLENOID VALVES

Foreign matter between the valve seat and seat disc can cause leakage. Valves are readily disassembled; however, care must be used during disassembly to be sure that internal parts are not damaged during the removal and that reassembly is in proper order.

A low hum or buzzing will normally be audible when the coil is energized. If the valve develops a loud buzzing or chattering noise, check for proper voltage and clean the plunger assembly and interior plunger tube thoroughly. Do not use any oil. Be sure that the plunger tube and solenoid are tight when reassembled. Take care not to nick, dent, or damage the plunger tube.

Coils may be replaced without removing the valve from the line.

⚠WARNING

Be sure to turn off power to the valve in order to avoid electrical shock. Failure to follow these instructions could result in serious personal injury or death.

Check coil position and make sure that any insulating washers or retaining springs are reinstalled in proper order.

K. AIR CONTROL DAMPER, LINKAGE AND CAM SPRING

The burner air control damper should be checked for free movement as a part of the monthly inspection. With the burner off and the jackshaft damper control rod disconnected, the air control damper should rotate freely through its entire range of movement. Any resistance to movement or excessive play in the support bearing should be investigated and corrected before the burner is put back in operation.

The overall tightness of the linkage assembly should be checked monthly. If necessary, tighten the setscrews and the connections at the uniballs. Check the uniballs for wear and replace if necessary.

The linkage assembly should be tight but should not bind. If the linkage assembly is binding, determine the cause of the binding and correct as necessary.

Linkage rod end attachment points should be marked on the variable displacement linkage arms as an aid in subsequent reassembly.

Inspection of the air damper and linkage bearings should be performed on a more frequent basis if the boiler is operating in a dirty environment.

The fuel cam profile spring should be inspected monthly for wear, scoring or distortion. If any of the questionable

conditions are found, the spring must be replaced immediately to avoid the possibility of breakage in service. Use care to avoid damaging the cam or spring during installation.

Lubricate occasionally with a non-gumming, dripless, high-temperature lubricant such as graphite or a silicone derivative.

⚠ CAUTION

Combustion should be checked and readjusted as required whenever the burner is removed or any control linkage is disturbed. Failure to follow these instructions could result in equipment damage.

L. FORCED DRAFT FAN

Figure 8-6 illustrates the forced draft fan and motor mounting in relation to the fan housing. The position of the fan housing and the clearance between it and the impeller is extremely important to the output capacity of the fan.

The procedures for installing and adjusting are as follows:

1. Bolt the motor securely to the head.
2. Slide the fan onto the shaft, but do not tighten the setscrews.
3. Turn the spacers on the studs until they contact the headplate.
4. Place external tooth lockwashers next to the spacers and install the fan housing on the studs. Hold the fan housing in place with nuts and lockwashers. Finger tighten the nuts.
5. Slide the impeller outward until its vanes contact the fan housing. The housing must be parallel to the impeller. Adjust the spacers as necessary to align the housing with the impeller.
6. Slide the impeller toward the motor. Use a feeler gauge to obtain .030-.050" clearance between the impeller and the housing.
7. Secure the key and then tighten the impeller hub setscrews. Using a selected vane, rotate the impeller while checking to see that the clearance between the impeller and the housing remains constant and within the specified 0.030-0.050" clearance.
8. Install the air duct assembly through the head opening. Tighten the screws securing the air duct to the fan housing only enough to create a seal between the neoprene gasket and the housing.

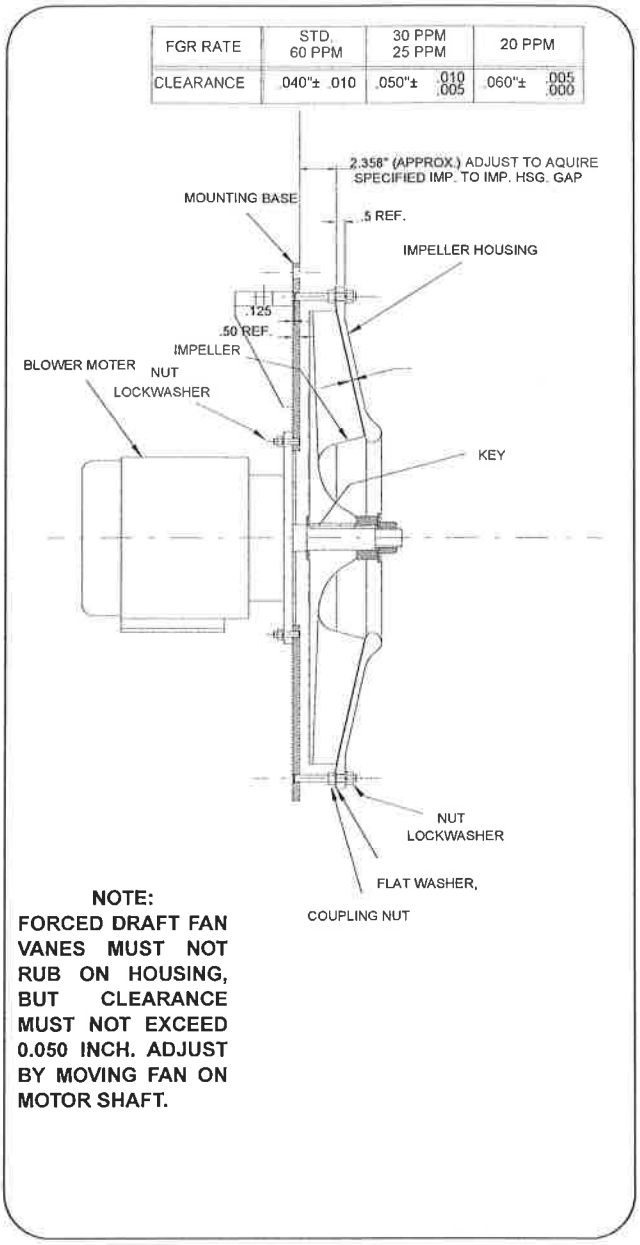

Figure 8-5: Forced Draft Fan Mounting

9. After connecting the motor leads, verify that the impeller rotation is counter-clockwise when viewed from the motor end.

   Note: If the boiler is installed in a dusty location, check the vanes occasionally for deposits of dust or dirt. These buildups can cause a decrease in air capacity, or lead to an unbalanced condition or cause damage to the equipment.

M. CB-LE FAN/MOTOR CASSETTE REMOVAL

Before the boiler is commissioned at the job site, the IFGR system should be visually inspected. The fan/motor cassette should be removed to expose the internal IFGR linkage and damper. Remove the fan/motor cassette as follows:

⚠ WARNING

Disconnect and lock out electrical power to the boiler before removing the fan/motor cassette. Failure to follow these instructions can result in electrical shock and serious personal injury or death.

1. Disconnect and lock out electric power to the boiler.

⚠ CAUTION

Chains or other devices used to attach a lifting device to the fan/motor cassette must be arranged so the cassette does not rotate or tilt when removed from the front head. Failure to follow these instructions could result in damage to the equipment.

2. Remove the fan/motor cassette fastening nuts (see Figure 8-8).

⚠ CAUTION

Be sure that the fan motor wiring and conduit are not stretched during the fan/motor cassette removal. Failure to follow these instructions can result in damage to the equipment.

3. Swing the fan/motor cassette to the side and secure it to the boiler using high strength cord. Do not over extend the motor wires.

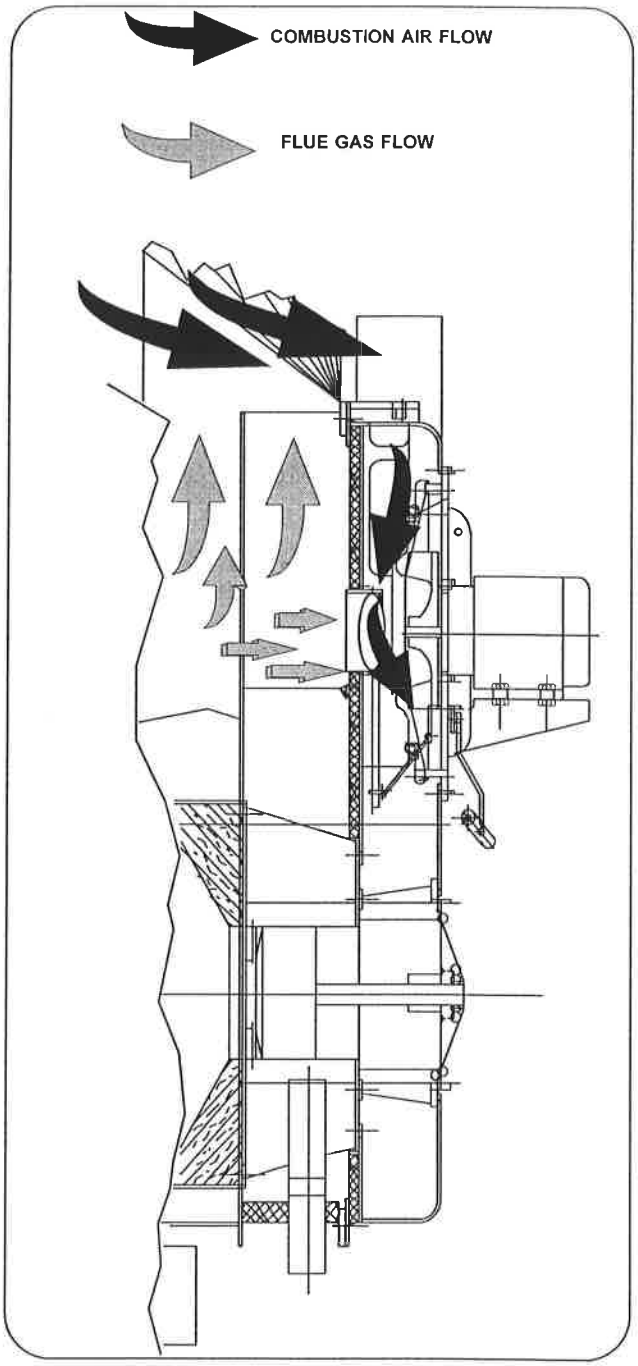

Figure 8-6: CB-LE Combustion Air and Flue Gas Flow

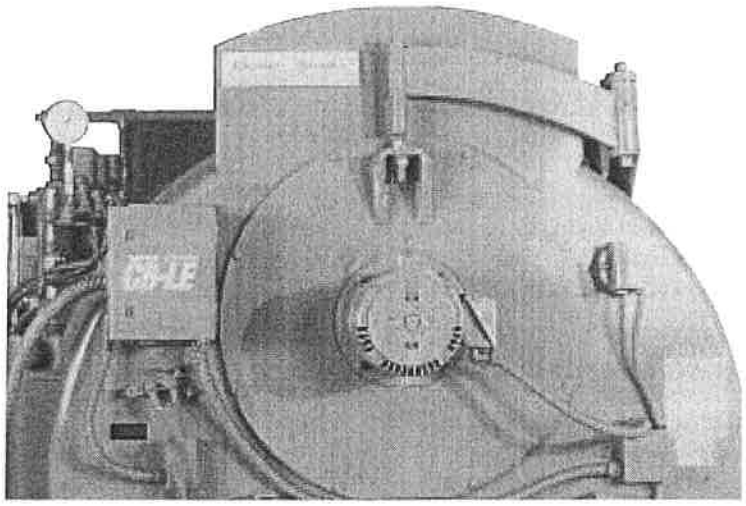

Figure 8-7: Fan/Motor Cassette

N. CB-LE INSPECTION AND ADJUSTMENT

NOx levels should be checked periodically to ensure compliance with all local and federal regulations, as well as to ensure that the boiler is operating at maximum efficiency. Linkages should be inspected and free movement (no binding) of the IFGR damper confirmed.

Increasing or decreasing NOx levels could indicate incorrect damper positioning, loose linkages, an improper air-to-fuel ratio, or stack draft changes. If adjustment is required, or if problems persist, contact your local Cleaver-Brooks authorized representative for further assistance.

As ash and products of combustion pass through the IFGR damper, there will be some accumulation on the damper, windbox, and other parts of the IFGR system and burner.

To ensure proper operation of the IFGR system and burner, inspection and cleaning should be performed at regular intervals depending on the load, type of fuel, and combustion temperatures.

1. With the IFGR damper exposed, inspect the internal linkages for secure connections, and check for free movement of the linkage arms and the IFGR damper assembly. To check for free movement of the linkage separate the external linkage from the jackshaft drive arm(s) and cycle the exterior linkage through its range of movement.
2. The clearance between the impeller and backplate should be checked, and adjusted, if required. Impeller clearances must be as shown in Table 8-1.
3. The impeller clearance is checked by inserting a long feeler gauge of the proper thickness between the impeller and the impeller housing. Impeller clearances should be checked at the highest fin on the impeller (that fin which is closest to the impeller housing), and must be checked at each point where the housing is attached to the motor backplate.
4. If the impeller clearance is not correct at all points, make adjustments as follows:
   A. Loosen the retaining nuts on both sides of the impeller housing.

STANDARD 60 PPM	30 PPM 25 PPM	20 PPM
.040 ±.010	0.050 +.010/–.005	.060 +.005/–.000

Table 8-1: Impeller Clearances

B. Adjust the retainers for the correct impeller clearance at two housing attachment points 180° apart.

C. Adjust the retainers for correct clearance at the housing attachment points 90° from those initially adjusted.

D. Adjust for correct impeller clearance at the remaining attachment points.

5. Check and replace any gaskets that have been damaged. Gaskets that have been in use for one year or more should be replaced. In particular, inspect the airbox gasket (Figure 8-9) for damage. If it needs to be replace, refer to Section O for installation instructions.

O. CB-LE AIRBOX GASKET

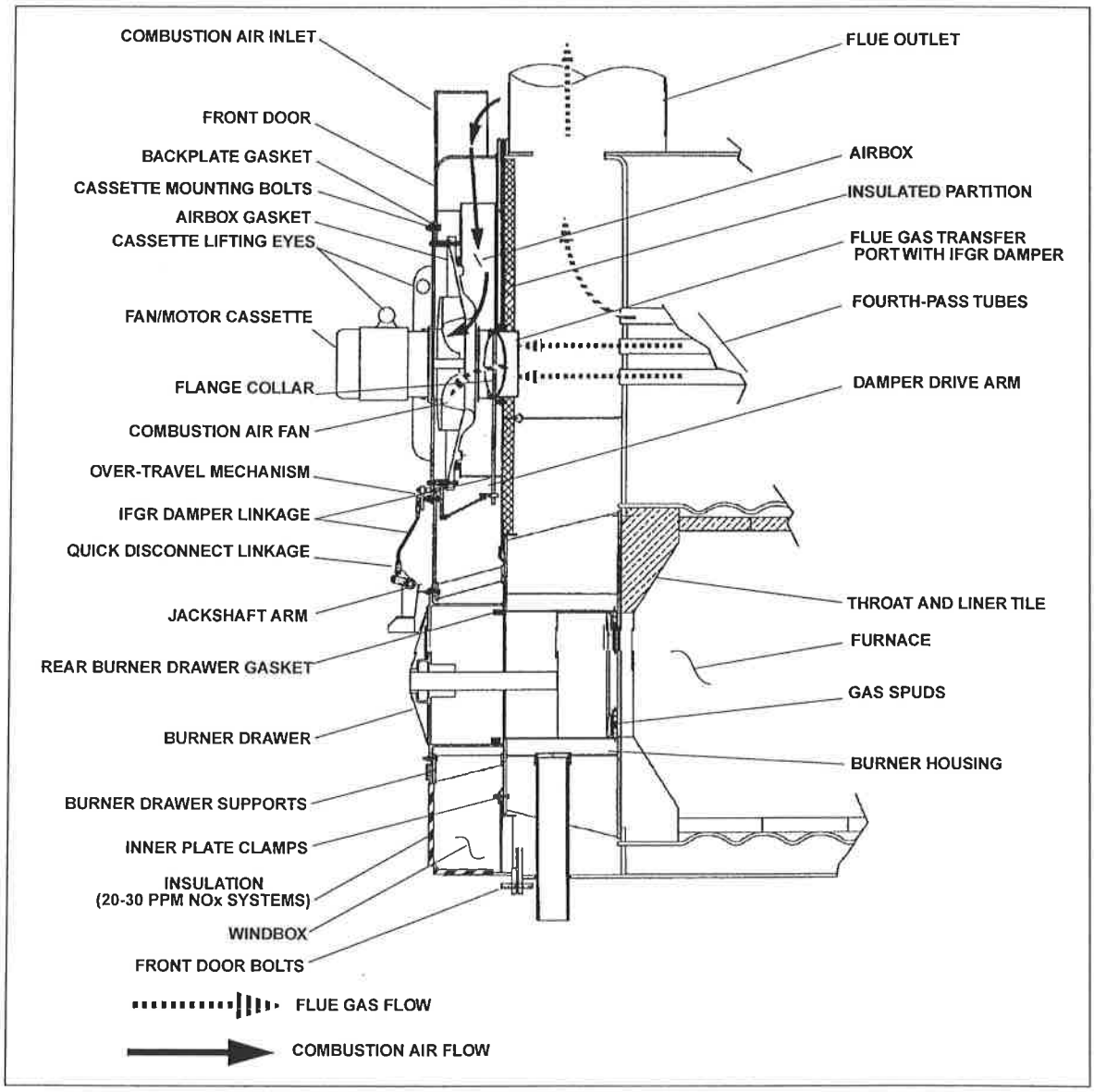

Figure 8-8: Induced Flue Gas Recirculation System, General Arrangement

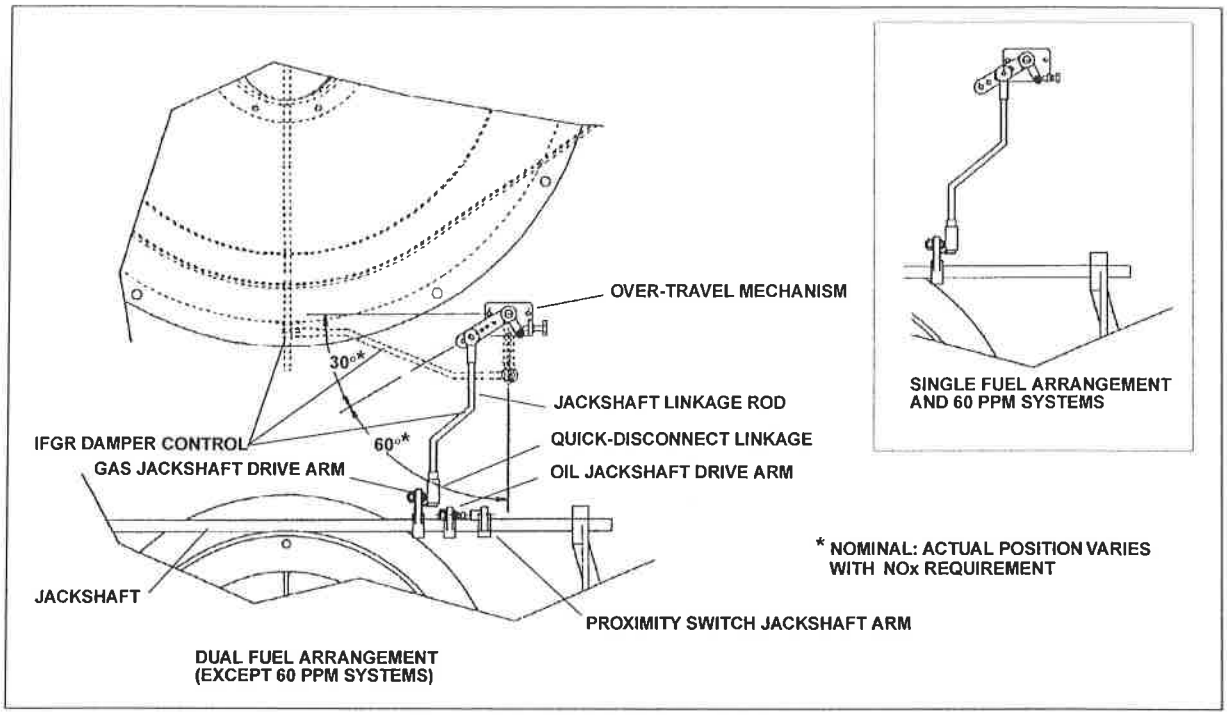

Figure 8-9: CB-LE Damper Linkage

INSTALLATION

If the fan/motor cassette is opened for any reason after the unit has been in operation for one year, the airbox gasket should be replaced.

⚠ CAUTION

When replacing the airbox gasket, use only Cleaver-Brooks components. Failure to use components designed for this application can result in improper combustion. Failure to follow these instructions can result in equipment damage

1. Attach the airbox gasket to the inlet box with high-temperature silicone adhesive/sealant, using two beads of silicone about 1/4" in from each side of the gasket (gasket surface is 2" wide).
2. Secure the gasket in position with clamps, using strips of wood on top of the gasket for a bearing surface.
3. After the silicone has dried (approximately 24 hours), remove the clamps and strips of wood.

P. CB-LE FAN/MOTOR CASSETTE INSTALLATION

The fan/motor cassette can be closed as follows:

1. Check that all adjustment screws are tight, and check the linkage and IFGR damper for free movement before closing the unit.
2. Position the cassette into the front door.

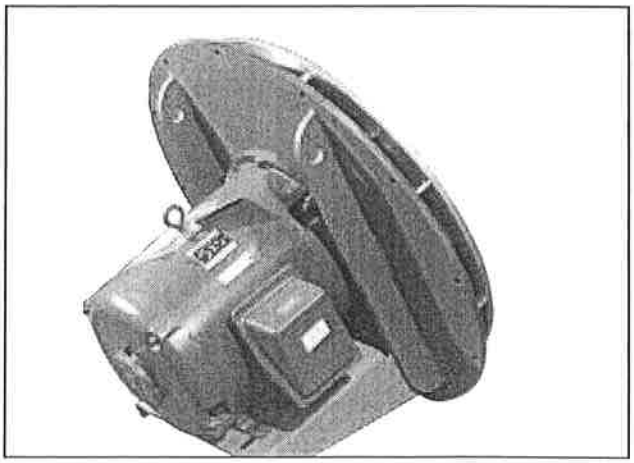

Figure 8-10: Fan/Motor Cassette

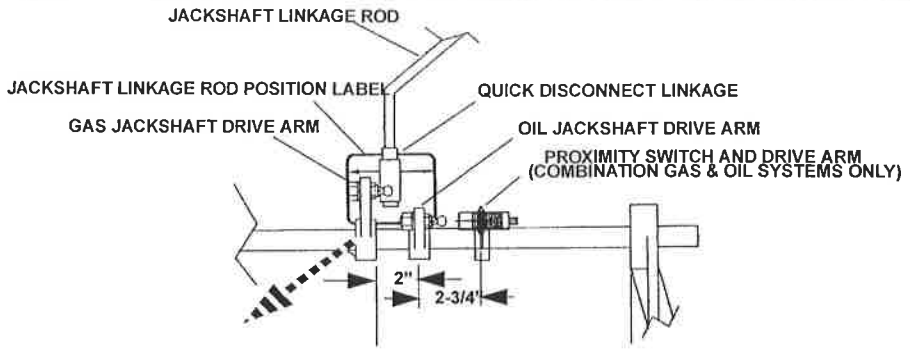

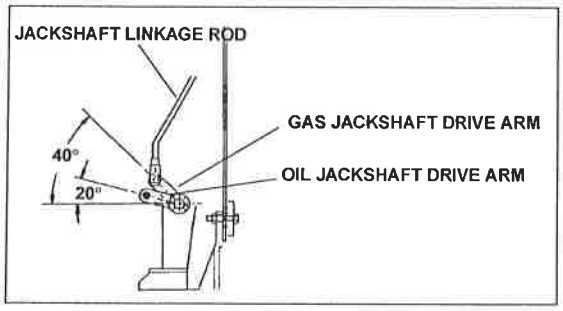

THE IFGR SYSTEM CAN BE EQUIPPED WITH EITHER A SINGLE OR DUAL LINKAGE ARM, DEPENDING ON THE NUMBER OF FUELS USED AND THE NO_X LEVELS DESIRED. ALL SINGLE-FUELED BOILERS HAVE A SINGLE DRIVE ARM/ DUAL-FUELED BOILERS MAY OR MAY NOT HAVE A DUAL ARM, DEPENDING ON THE OPTION PURCHASED.

BOILER HP	PPM NOX	"A"	"B"	"C"	"D"	"E"	"F"	"G"	"H"	"J"	"K"
125	60	10°	3/8"	3-1/8"	#2	#2	11°	79°	#8	40°	20°
	30	10°	13/16"	3-1/8"	#2	#2	11°	79°	#8	40°	20°
	25	10°	1"	5-3/4"	#2	#5	11°	79°	#8	30°	23°
	20	10°	1-1/4"	6-1/2"	#2	#5	7°	83°	#8	25°	24°
150	60	10°	3/8"	3-1/8"	#2	#2	11°	79°	#8	40°	20°
	30	10°	13/16"	3-1/8"	#2	#2	11°	79°	#8	40°	20°
	25	10°	1"	5-3/4"	#2	#5	8°	82°	#8	37°	23°
	20	10°	1-1/4"	6-3/8"	#2	#5	10°	80°	#8	33°	24°
200	60	10°	3/8"	3-1/8"	#2	#2	11°	79°	#8	40°	20°
	30	10°	13/16"	3-1/8"	#2	#2	11°	79°	#8	40°	20°
	25	10°	1"	2"	#2	#5	0°	90°	#8	46°	16°
	20	NOT OFFERED									

Figure 8-11: Jackshaft Linkage Settings

3. Slide the cassette into position until it begins to contact the backplate gasket (Figure 8-8) then measure the clearance between the cassette flange and the front door mounting face. There must be clearance of at least 1/4" to provide adequate gasket compression when the cassette is mounted tightly to the door.
4. Secure the cassette with the fastening nuts.

⚠WARNING

Do not remove the davit arm assembly from the motor/fan cassette without first verifying that the cassette is securely bolted to the boiler. Failure to follow these instructions can result in serious personal injury or death.

5. After the cassette has been secured to the front head, reconnect the davit to the front door by screwing in the retaining bolt at the top centerline.

Check occasionally that the fan is securely tightened to the motor shaft. Check the clearance between the fan vanes and housing as outlined above.

Note: If the boiler is installed in a dusty location, check the vanes occasionally for deposits of dust or dirt. These buildups can cause a decrease in air capacity, or lead to an unbalanced condition or cause damage to the equipment

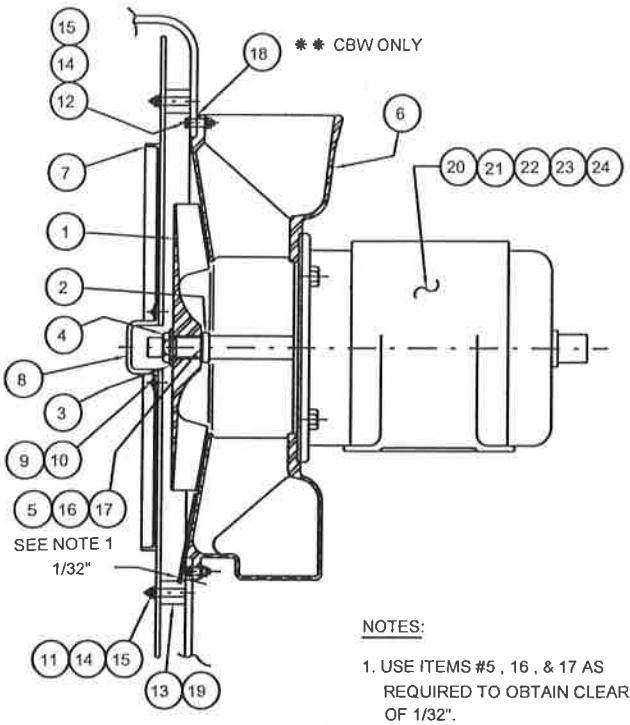

TABLE ITEM 1				
BOILER H.P.	50 HZ	OP CODE	60 HZ	OP CODE
125	192-C-43	A7	192-C-42	A7
150	192-C-46	A7	192-C-43	A7
200	192-C-70	A7	192-C-46	A7

NOTES:

1. USE ITEMS #5 , 16 , & 17 AS REQUIRED TO OBTAIN CLEARANCE OF 1/32".

* MAXIMUM QUANTITY SHOWN, BASED ON REQUIREMENTS.

BLOWER MOTOR ITEM 20

BOILER H.P.	MODEL	FUEL	60 HZ. MOTOR H.P.	60 HZ. ODP 200-220-460V	60 HZ. ODP 600V	60 HZ. TEFC 200-230-460V	60 HZ. TEFC & HI-EFF. 200-230-460V	50 HZ. MOTOR H.P.	50 HZ. ODP 220-380V
125	CB	ALL	5	894-2414	894-2415	-	894-3393	5	894-2416
150	CB	GAS	5	894-2414	894-2415	-	894-3393	5	894-2416
		OIL & COMB.	7-1/2	894-2419	894-2420	894-3216	894-3394	7-1/2	894-3167
200	CB	GAS	10	894-2435	894-2436	894-3141	894-3398	15	894-2453
		OIL & COMB.	15	894-2451	894-2452	894-3183	894-3400	15	894-2453

Figure 8-12: Blower Cartridge Assembly

ITEM	QTY	PART NO.	DESCRIPTION	OP CODE	USED ON
1	1	SEE TABLE	IMPELLER		SEE TABLE
2	1	77-61	SPACER, IMPELLER	A7	200HP @ 50HZ
3	1	77-A-184	SPACER, IMPELLER	A4,A7	200HP @ 60HZ
	1	77-61	SPACER, IMPELLER	A4,A7	200 H.P.@60 HZ.
4	1	869-119	NUT, SELF LOCKING, JAM	A4,A7	ALL
5	2	91-A-60	WASHER, SPACER	A4,A7	200HP @ 50HZ
	2	91-148	WASHER, SPACER, 0.010" (91-A-59)	A7	200HP @ 50HZ
6	1	85-D-43	SUPPORT, MOTOR, & AIR HOOD	A2	ALL
7	1	22-B-10	PLATE, DIFFUSER	A2	ALL
8	1	19-A-375	COVER, SHAFT	A4	ALL
9	2	860-114	SCREW,MACH..RD.HD.1/4"-20 X 5/16"LG.		ALL
10	2	952-92	LOCKWASHER, 1/4"		ALL
11	6	952-298	WASHER		ALL
12	8	868-159	CAPSCREW,HEX.HD.,3/8"-16 X 1-3/4"LG.		ALL
13	6	77-62	SPACER	A4	200 H.P.
	6	77-71	SPACER	A4	125 H.P. ONLY
	6	77-66	SPACER	A4	150 H.P. ONLY
14	* 30	952-93	LOCKWASHER, 3/8"		ALL
15	* 29	869-30	NUT, HEX., 3/8"-16		ALL
16	2	91-59	WASHER, SPACER, .005	A4,A7	ALL
17	*2	91-61	WASHER, SPACER, 1/16"	A7	ALL
18	1	32-A-690	AIR HOUSING GASKET	A2	ALL
19			NOT USED		
20	1	SEE TABLE	BLOWER MOTOR	A7	-
21	1	1-B-478	ADAPTER RING	A2	-
22	4	868-176	CAPSCREW, HEX HEAD, 1/2" x 2" LG.	-	-
23	4	952-94	LOCK WASHER, 1/2"	-	-
24	4	869-15	NUT, 1/2"	-	-

Figure 8-13: Motor & Impeller 60"

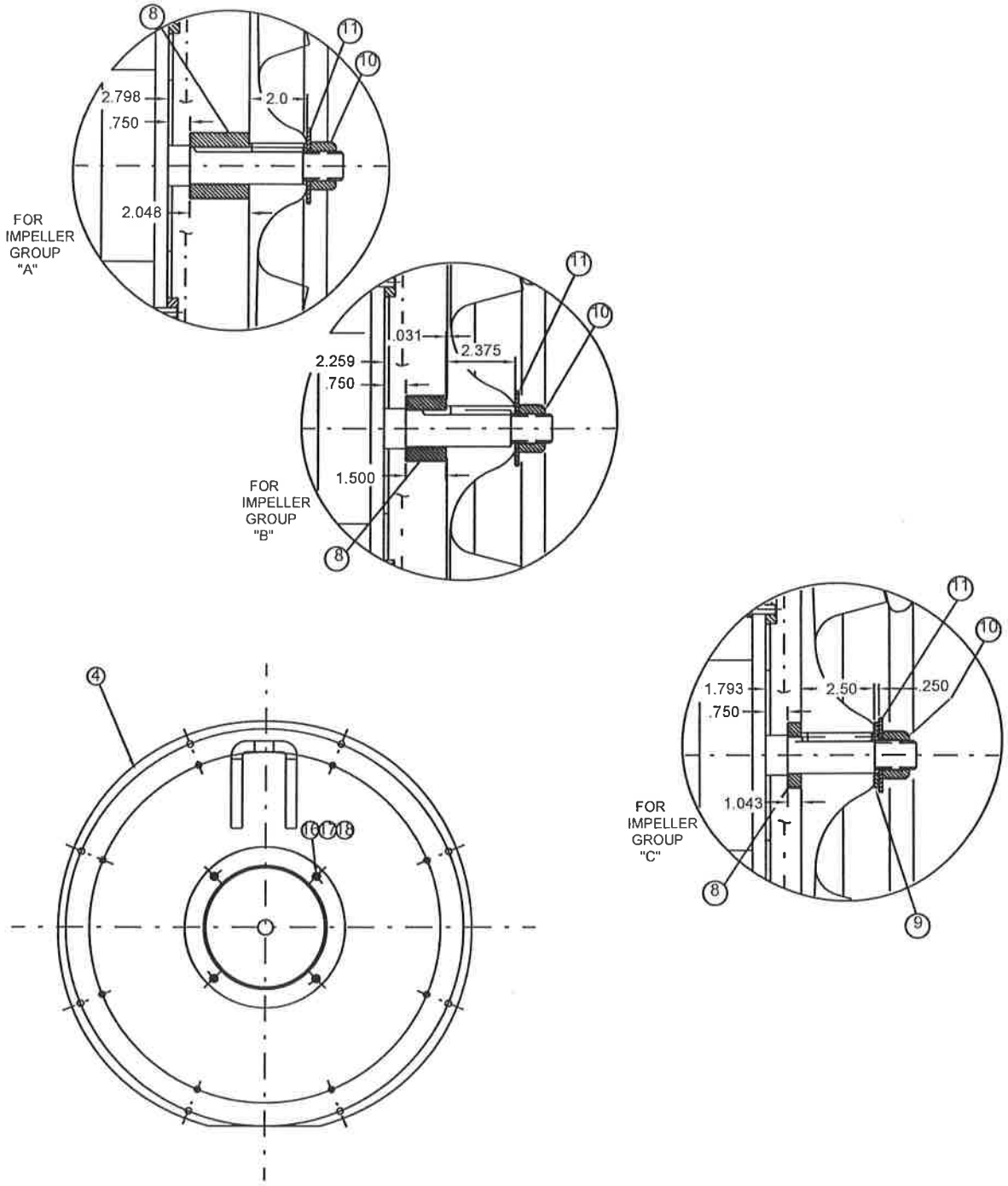

Figure 8-14: Blower Cartridge Assembly

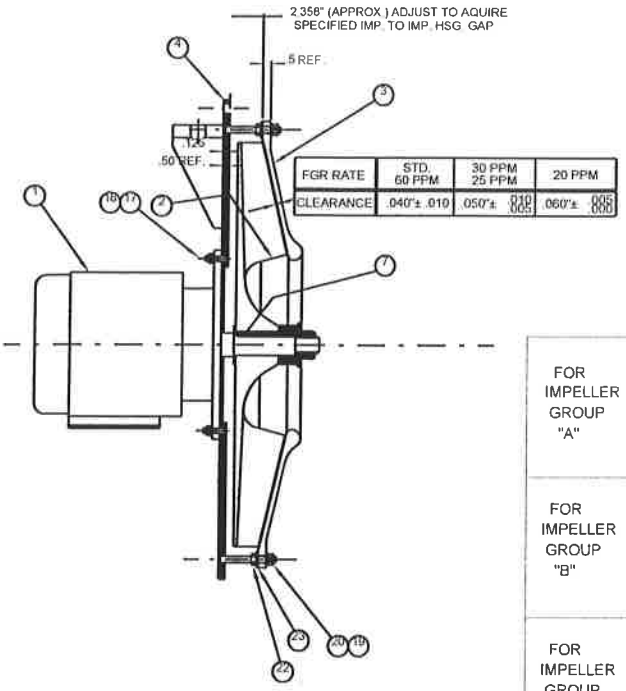

FGR RATE	STD. 60 PPM	30 PPM 25 PPM	20 PPM
CLEARANCE	.040"± .010	.050"± .010 / .005	.060"± .005 / .005

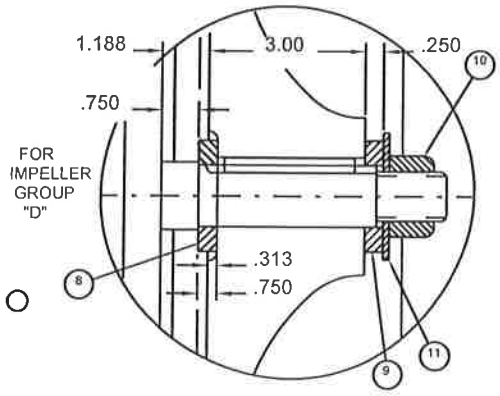

BASIC BILL OF MATERIAL 60" DIA. - 125 THRU 200				
ITEM	QTY	PART NO.	DESCRIPTION	USED ON
1	1	TABLE	BLOWER MOTER	-
2	1	TABLE	IMPELLER - OPEN TYPE	-
3	1	040C00606	HOUSING - IMPELLER	-
4	1	407B00064	BASE, MOUNTING (IMPELLER GROUP "A")	0-15 MTR H.P.(D.P.) 0-10 MTR H.P. (TEFC)
4	1	407B00062	BASE, MOUNTING (IMPELLER GROUP B,C,D)	0-15 MTR H.P.(D.P.) 0-10 MTR H.P. (TEFC)
4	1	407-00063	BASE, MOUNTING	20-40 MTR H.P.(D.P.) 15-30 MTR H.P.(TEFC)
5	2	N/A	BAR, REINFORCING/LIFTING LUG	-
6	0	N/A	SUPPORT, MOTOR	0-20 MTR H.P.
6	1	085-03120	SUPPORT, MOTOR (085-03120)	30-40 MTR H.P.
7	1	841-00410	KEY (1/4" SQ. X 2-1/2" LG.)	0-7.5 MTR H.P.
7	1	841-01105	KEY (5/16" SQ. X 2-1/2" LG.)	10-40 MTR H.P.
8	1	077-00438	SPACER- 2.048" THK. (077-B-00432)	0-7.5 MTR H.P.
8	1	077-00454	SPACER- 2.048" THK. (077-B-00432)	10-30 MTR H.P.
8	1	077-00xxx	SPACER- 2.048" THK. (077-B-00432)	40-75 MTR H.P.
8	1	N/A	SPACER- -" THK. (077-B-00432)	0-7.5 MTR H.P.
8	1	N/A	SPACER- -" THK. (077-B-00432)	10-30 MTR H.P.
8	1	N/A	SPACER- -" THK. (077-B-00432)	40-75 MTR H.P.
8	1	077-00490	SPACER- 1.50" THK. (077-B-00432)	0-7.5 MTR H.P.
8	1	077-00493	SPACER- 1.50" THK. (077-B-00432)	10-30 MTR H.P.
8	1	077-00xxx	SPACER- 1.50" THK. (077-B-00432)	40-75 MTR H.P.
8	1	N/A	SPACER- -" THK. (077-B-00432)	0-7.5 MTR H.P.
8	1	N/A	SPACER- -" THK. (077-B-00432)	10-30 MTR H.P.
8	1	N/A	SPACER- -" THK. (077-B-00432)	40-75 MTR H.P.
8	1	077-00489	SPACER- 1.04" THK. (077-B-00432)	0-7.5 MTR H.P.
8	1	077-00492	SPACER- 1.04" THK. (077-B-00432)	10-30 MTR H.P.
8	1	077-00xxx	SPACER- 1.04" THK. (077-B-00432)	40-75 MTR H.P.
8	1	077-00488	SPACER- .250" THK. (077-B-00432)	0-7.5 MTR H.P.
8	1	077-00478	SPACER- .250" THK. (077-B-00432)	10-30 MTR H.P.
8	1	007-00495	SPACER- .250" THK. (077-B-00432)	40-75 MTR H.P.
8	1	077-00491	SPACER- .750" THK. (077-B-00432)	10-30 MTR H.P.
8	1	007-00478	SPACER- .250" THK. (077-B-00432)	10-30 MTR H.P.
10	1	869-00119	NUT, JAMB- SELF LOCK. (1"-14 UNF)	0-7.5 MTR H.P.
10	1	869-00177	NUT, JAMB- SELF LOCK. (1-1/4" UNF)	10-30 MTR H.P.
11	1	952-00132	WASHER, (2 OD. X 1.0625 ID.)	0-7.5 MTR H.P.
11	1	952-00225	WASHER, (2.5 OD. X 1.3125 ID.)	10-30 MTR H.P.
12	4	952-176	CAPSCREW, HEX, HD. 1/2"-13	30-40 MTR H.P.(D.P.) 30 MTR H.P. (TEFC)
12	4	869-95	CAPSCREW, HEX, HD. 5/8"-11	50-60 MTR H.P. (D.P.) 40-60 MTR H.P. (TEFC)
13	4	869-00015	NUT, HEX, 1/2"-13	30-40 MTR H.P.(D.P.) 30 MTR H.P. (TEFC)
13	4	869-00017	NUT, HEX, 5/8"-11	50-60 MTR H.P. (D.P.) 40-60 MTR H.P. (TEFC)
14	4	952-00108	WASHER, 1/2"	30-40 MTR H.P.(D.P.) 30 MTR H.P. (TEFC)
14	4	952-00101	WASHER, 5/8"	50-60 MTR H.P. (D.P.) 40-60 MTR H.P. (TEFC)
15	4	952-00094	LOCKWASHER, 1/2"	30-40 MTR H.P.(D.P.) 30 MTR H.P. (TEFC)
15	4	952-00084	LOCKWASHER, 5/8"	50-60 MTR H.P. (D.P.) 40-60 MTR H.P. (TEFC)
16	4	869-00015	NUT, HEX, 1/2"	0-15 MTR H.P.(D.P.) 0-10 MTR H.P. (TEFC)
16	4	869-00018	NUT, HEX, 3/4"	20-60 MTR H.P. (D.P.) 15-60 MTR H.P. (TEFC)
17	4	952-00094	LOCKWASHER, 1/2"	0-15 MTR H.P.(D.P.) 0-10 MTR H.P. (TEFC)
17	4	952-00095	LOCKWASHERS, 3/4"	20-60 MTR H.P. (D.P.) 15-60 MTR H.P. (TEFC)
18	4 OZ.	887-00027	NEVER SEEZ - ANTI-SEIZE COMPOUND	-
19	8	869-00365	NUT, HEX, 3/8"-16 JAM	-
20	8	952-00093	LOCKWASHER, 3/8"	-
21	-	--	--	-
22	8	869-00101	NUT, COUPLING, 3/8"-16 X 1-3/4" LG	-
23	8	952-00101	WASHER, FLAT, 3/8" SAE TYPE	-

Figure 8-15: Blower Cartridge Assembly

NOTE: RECORD "INSTALLED" VALUES ON THIS ILLUSTRATION FOR FUTURE REFERENCE.

A._____ FLANGE COLLAR SETTING
B._____ DAMPER POSITION AT LOW-FIRE
C._____ DAMPER LINKAGE ARE ANGLE (DEGREES)
D._____ HOLE POSITION NUMBER

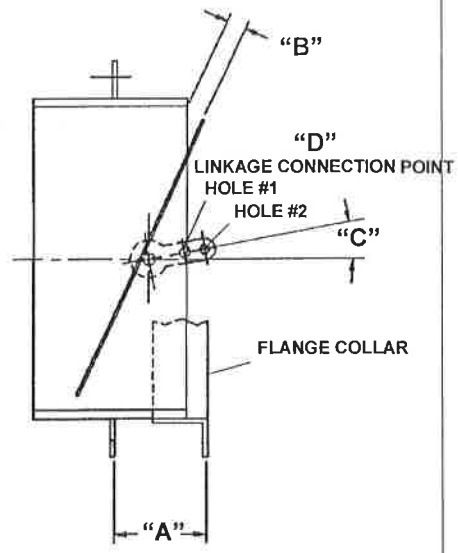

DAMPER SHOWN IN THE LOW-FIRE POSITION

Figure 8-16: Flange Collar and Damper Settings (Top View)

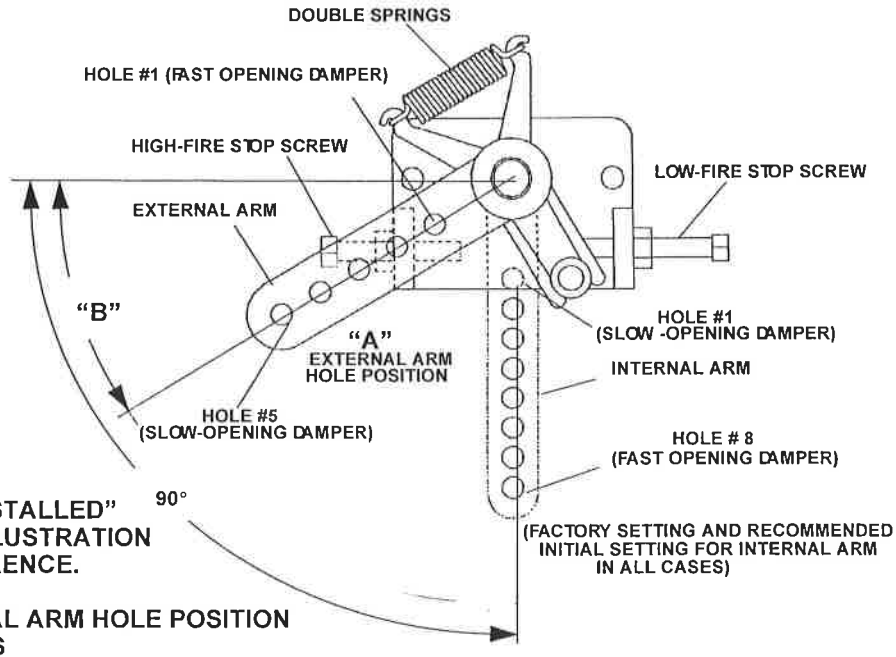

NOTE: RECORD "INSTALLED" VALUES ON THIS ILLUSTRATION FOR FUTURE REFERENCE.

A._____ EXTERNAL ARM HOLE POSITION
B._____ DEGREES

Figure 8-17: Overtravel Linkage Settings

Q. SAFETY VALVES

The safety valve is a very important safety device and deserves attention accordingly.

Follow the recommendations of your boiler inspector regarding valve inspection and testing. The frequency of testing, either by the use of the lifting lever or by raising the steam pressure, should be based on the recommendation of your boiler inspector and/or the valve manufacturer, and in accordance with sections VI and VII of the ASME Boiler and Pressure Vessel Code.

Avoid excessive operation of the safety valve; even one opening can provide a means of leakage. Safety valves should be operated only often enough to assure that they are in good working order. When a pop test is required, raise the operating pressure to the set pressure of the safety valve, allowing it to open and reseat as it would in normal service.

Do not hand operate the valve with less than 75% of the stamped set pressure exerted on the underside of the disc. When hand operating, be sure to hold the valve in an open position long enough to purge accumulated foreign material from the seat area and then allow the valve to snap shut.

Frequent usage of the safety valve will cause the seat and disc to become wire drawn or steam cut. This will cause the valve to leak and necessitate down time of the boiler for valve repair or replacement. Repair of a valve must be done only by the manufacturer or his authorized representative.

Avoid having the operating pressure too near the safety valve set pressure. A 10% differential is recommended. An even greater differential is desirable and will assure better seat tightness and valve longevity.

R. FUEL OIL METERING VALVE

In the event that a leak occurs in the packing of the metering valve, the packing nut should be snugged gradually to stop the leak (see Figure 8-18).

⚠ CAUTION

Do not over tighten the metering valve packing nut. Excessive tightening of the packing nut prevents free movement of the metering stem. Failure to follow these instructions can cause damage to the equipment.

If replacement of the metering valve packing is necessary, procure **kit P/N 880-370** and install in accordance with the following procedure.

1. Shut off the oil flow. Be sure no pressure shows on the gauge.
2. Match-mark the cam hub and drive shaft. Match marking will enable replacement of the cam in its original position and result in a minimum of cam adjustment when the burner is refired.
3. Clamp or hold the metering stem in the down position.
4. Loosen the setscrews in the cam hub and rotate, or move the cam to a position where it does not interfere with stem removal.
5. Withdraw the metering valve stem and spring. Do not drop or mishandle. Check for nicks or scratches. Check that the pin holding the metering portion is not protruding. Back off the packing gland.
6. Remove the capscrews holding the jack shaft support bracket so that the bracket can be moved. It may also be necessary to loosen the supporting bracket on the far end of the shaft.
7. Remove the existing packing and guides. Do not reuse the packing and guides.
8. Lightly coat the stem with the lubricant provided with the packing kit. Place the new packing, O-rings and guides onto the stem in the sequence shown in Figure 8-18. The beveled face of the guides and the teflon rings must face upward, with the exception of the upper brass guide

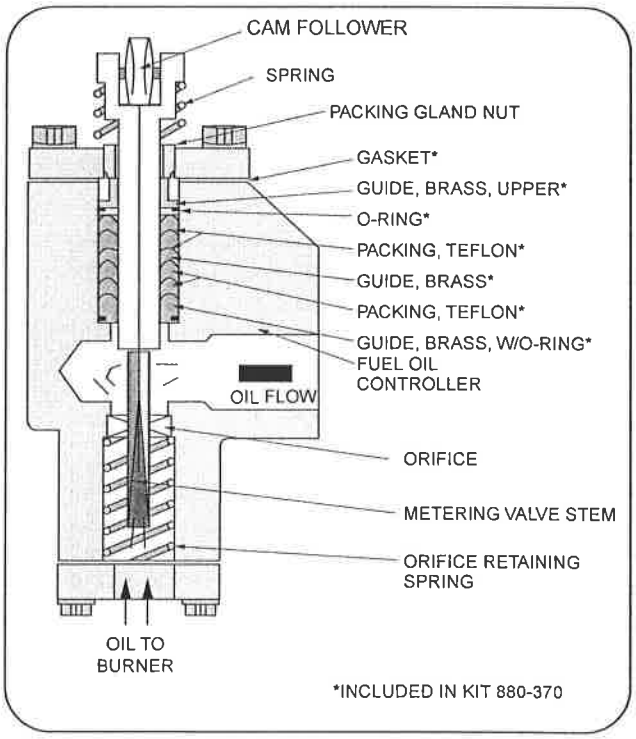

Figure 8-18: Metering Valve Packing Sequence

which is faced down. Be sure that the O-rings are properly located.

9. Using the stem as a guide, insert the assembled packing into the cavity, then withdraw the stem.
10. In the event the packing is too high, remove one teflon packing from each side of the middle brass guide as needed.

    Under no circumstances eliminate the two teflon packings on only one side of the brass guide.
11. Replace the gasket, put the support in place, and secure all fastenings.
12. Replace the metering stem and spring. Lightly lubricate the stem to facilitate insertion and easy movement. Use care when inserting so that the orifice and the stem are not damaged.
13. Snug the packing gland, but only sufficiently to place slight tension on the packing. The stem must move freely from the force of the spring.
14. Work the stem up and down several times to ensure that it moves freely.
15. Depress the valve stem and replace the cam. Mate the match-marks and secure the setscrews. Be sure the cam spring is centered in the roller.
16. Restore oil flow. Test fire the burner at various firing rates being certain that the metering stem freely follows the cam.
17. Tighten the packing gland after a period of operation, if necessary, to maintain proper tension on the packing. Do not overtighten.

If there are indications that the oil metering valve has become clogged at its orifice, it will be necessary to disassemble the control to remove the obstruction. Clean the slotted stem of the oil metering valve with suitable solvent and blow-dry with an air line. Follow the procedure outlined above when removing or reinstalling the metering valve stem. Also check all fuel line strainers.

Should a pressure adjusting or relief valve become clogged, disassemble by releasing the locknut and backing off the screw to relieve tension on diaphragm. Remove the valve cover and the diaphragm to expose any dirt or foreign material which may have entered the valves. Clean out carefully and reassemble. It is recommended that the diaphragms be replaced annually.

S. AIR PUMP AND LUBRICATING SYSTEM

Air Pump

The air pump itself requires little maintenance. However, the life of the pump is dependent upon a sufficient supply of clean cool lubricating oil. The oil level in the air-oil tank must be

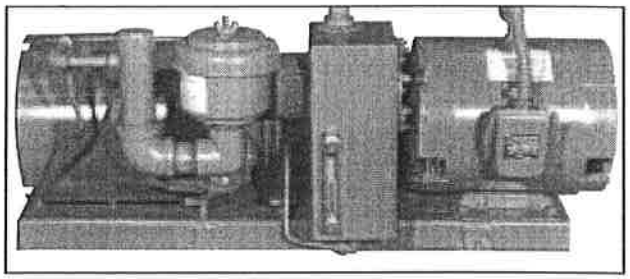

Figure 8-19: Air Compressor Module CB-LE

observed closely. Lack of oil will damage the pump making replacement necessary. Disassembly or field repairs to the pump are not recommended.

Lubricating Oil

Lubricating oil must be visible in the gauge glass at all times. There is no specific level required as long as oil is visible. Do not operate if oil is not visible.

Oil with proper viscosity must be used. SAE 20 detergent is recommended, although SAE 10 detergent is also permissible.

When adding oil:

Remove the cover from the fill pipe and add oil through the conical strainer in the pipe **with the unit running**.

⚠ CAUTION

Oil must NEVER be added unless the pump is in operation and the strainer screen is in place. Failure to follow these instructions can cause damage to the equipment.

The oil and its container should be clean. Although there is a strainer in the lube oil line, its purpose is to remove any unwanted materials rather than to act as a filter for unclean oil.

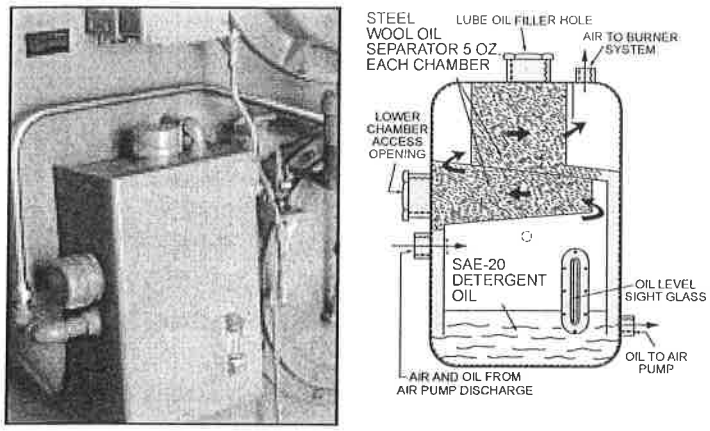

Figure 8-20: Air Oil Receiver Tank CB-LE

Lubricating Oil Strainer and Cooling Coil

Air pressure from the pump forces lubricating oil from the tank through a cooling tube (see Figure 8-35) to the pump. The oil lubricates the pump bearings and also provides a seal and lubrication for the pump vanes.

The cooled oil flows to the pump through the strainer in the filler pipe. It is possible to visually verify oil flow during operation by removing the filler cap and checking the flow. If necessary, the strainer may be cleaned during operation.

In the event it is necessary to clean the strainer during operation, clean it and replace immediately. It can be cleaned by immersing in solvent and blowing it dry with compressed air. Do not operate without the strainer any longer than necessary, and never add new oil unless it is in place. A spare strainer basket can be obtained, if desired, and used on a rotating basis while the other is serviced.

Air Cleaner

Never operate the air pump without the air cleaner in place. The cleaner itself must be periodically checked and its element flushed and cleaned semi-annually.

Air-Oil Tank

Pads of steel wool are used in the air to oil tank as a filtering medium to separate the lube oil from the compressed air. Figure 8-20 shows a cross-section of the tank and the location of the steel wool.

The pads play a very important role and should be replaced semi-annually. It is also important that a proper grade of steel wool be used. Only No. 3 coarse grade American steel wool or equal (CB919-124) should be used. Three pads are required. When replacing the wool, insert two pads into the cylinder. Alternate the grain of the pads. Install the spacer with its stub end toward the opening and fit one pad over the stub. Be careful not to overly compress the wool and be sure that it is fluffed out to fill all available space. Improper packing can cause high oil consumption. After the last pad is in place, slip the retainer screen onto the cylinder. Be sure to fit an O-ring gasket under the cover so that a tight seal is obtained.

Follow previous instructions for oil replacement.

Lube Oil Cooling Coil

The fins on the tubing must be kept clean and free of any dust or dirt that would resist air flow and cause overheating. Use an air hose to blow away debris. Internal cleaning of the tubes is seldom required if a good quality lube oil is used.

Flexible Coupling Alignment

Alignment of the pump and motor through the flexible coupling is extremely important for trouble-free operation. Check the coupling alignment semi-annually and replace the coupling insert as required. Keep the coupling guard in place.

The most commonly used tools for checking alignment are a small straightedge and a thickness gauge.

The coupling must be checked for both parallel (offset) alignment and angular (gap) alignment. Parallel misalignment exists when shaft axis are parallel but not concentric (see Figure 8-21). Angular misalignment is the reverse situation - shaft axis concentric, but not parallel.

Checking parallel alignment, both horizontal and vertical can be accomplished, by laying a straightedge across the coupling halves and checking with a thickness gauge to obtain the amount of misalignment. The check should be done on the top of the coupling and at 90 degrees. A useful hint is to hold a flashlight behind the straightedge so that any gap can readily be seen.

Shim stock of appropriate thickness and area is then used under either the feet of the pump or the motor to establish parallel alignment. A tolerance of .008" is a permissible limit.

After parallel alignment is established, check for angular alignment, which is done by checking the gap between coupling halves. The coupling should have a minimum gap of 1/16" and a maximum of 3/32".

Set the spacing between the halves at one point by using a thickness gauge and then rotate the coupling slowly to be sure that clearance at that point remains the same through 360 degrees of rotation. Adjust to obtain proper gap by loosening the hold-down bolts and shifting either the pump or the motor as required. Generally, a slight tapping on either the front or rear legs is all that is needed to obtain lateral adjustment. Rear legs may require shimming for vertical correction.

Tighten the hold-down bolts after adjustments are made and recheck alignment.

Calipers can also be used to check angular alignment. Measure the overall distance of the outer ends of the coupling

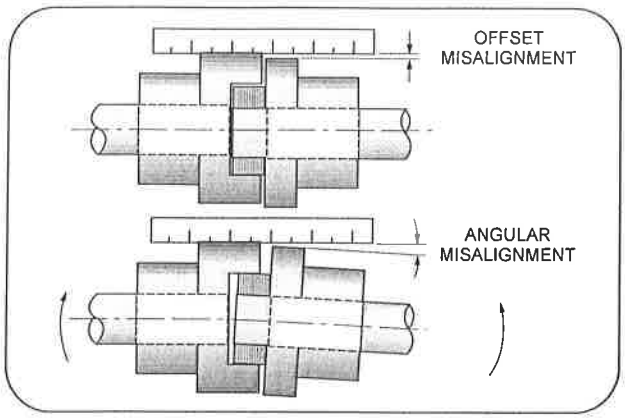

Figure 8-21: Coupling Alignment

halves at 90° intervals. Shift the pump or motor, as required, so that the ends of the coupling are the same distance apart at all points. The coupling will then have proper angular alignment.

Remember that alignment in one direction may alter alignment in another. Recheck both angular and parallel alignment procedures after making any alteration.

A properly aligned coupling will last longer and will provide trouble-free mechanical operation.

Air Compressor Replacement

Use the following procedures in replacing the pump on a CB-LE. Be sure to tag the motor leads if disconnected to simplify reconnection. Refer to Figure 22 for component locations.

Dismantling

1. Lift out the two front cylinder pins that hold the screen, and remove the screen.
2. Disconnect the flared nut on tubing "A" (behind screen) and lift tubing "A" high enough to prevent drainage of lubricating oil from the tank.
3. Disconnect the flared nut at the orifice fitting.
4. Remove the two sheet metal screws that hold the cylinder in place. One screw is located at the top rear of cylinder, the other is at the bottom front.
5. Remove the entire heat exchange assembly, consisting of the cylinder, the finned tubing, and the oil line "B."
6. Remove the fan from the air pump.
7. Disconnect the flexible air line from the lube tank.
8. Remove the coupling guard by pushing in on both sides until it clears the clamp.

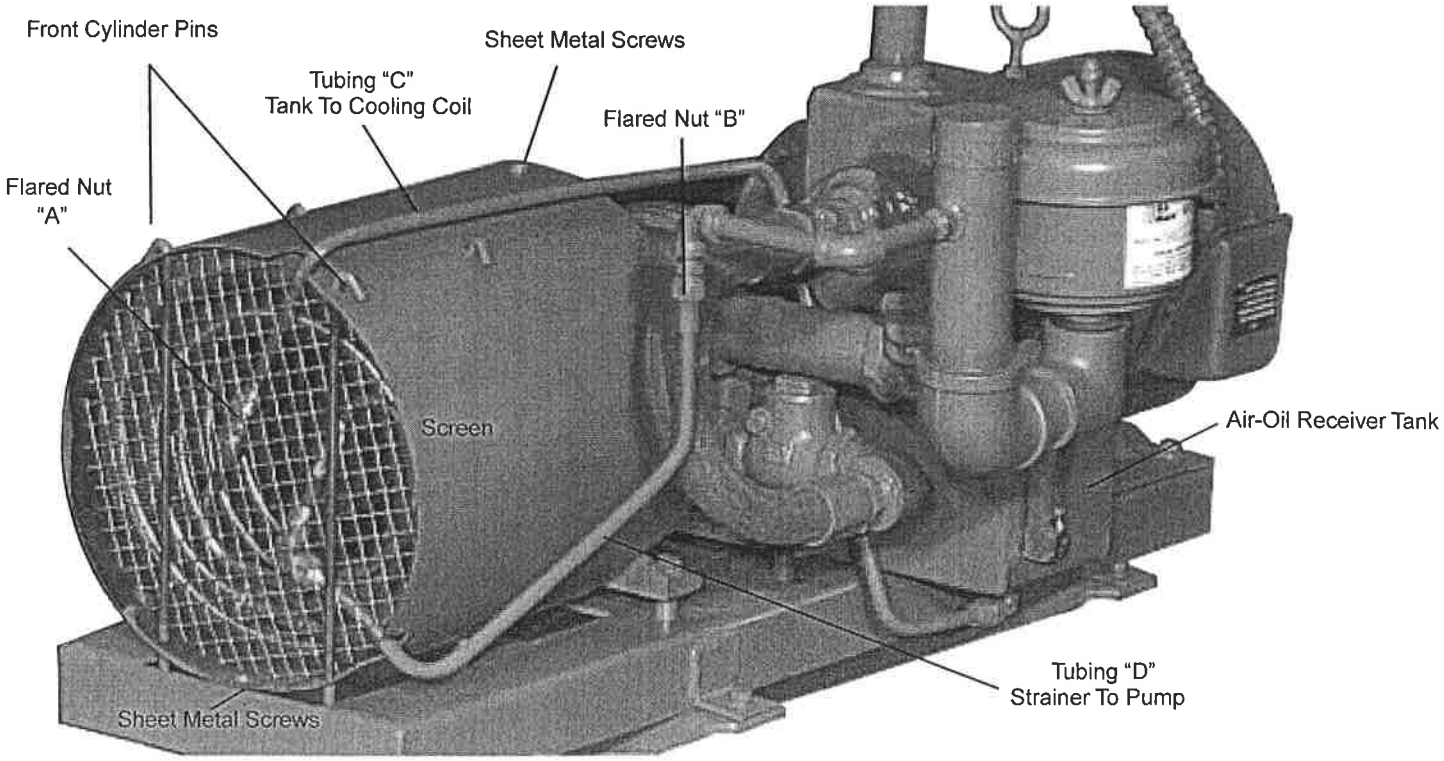

Figure 8-22: Side Mounted Air Compressor Details

9. Loosen the clamp at the rear of the tank and remove the tank with copper tubing "A" attached.
10. Leave the rear pump bracket (coupling end) in place to aid in realignment of the replacement pump. Do this by removing the two capscrews that extend through the bracket into the pump housing. Temporarily leave the front bracket attached to the pump.
11. Remove screws holding the front bracket to the base and lift off the pump with its attachments. Note the location of the pipe fittings and brackets prior to removing for installation on the replacement pump. If piping is dismantled, be sure that the check valve is reinstalled so that the gate swings towards the pump.

Reassembly

Reassembly in reverse order of disassembly. With the rear pump bracket left in place, realignment and spacing between the pump shaft and the motor shaft is greatly simplified.

There should be approximately 7/8" space between the two shafts. Place the coupling insert between the coupling halves prior to reassembly. Check that both shafts rotate freely.

Refer to the previous section on coupling alignment instructions.

If shims were used originally under either pump brackets or motor feet, be sure that they are correctly reinstalled.

When reinstalling the fan, slide the hub on the pump shaft so that it is bottomed. Tighten the setscrew and cap screws. If the fan blades were removed from the hub, be sure that the side of the blade marked "Blower" faces the hub when reassembling. When tightening the coupling halves or the fan hub, tighten the setscrews against the key first, then tighten the setscrew against the shaft. Clean or remove any dust or grime from the blades prior to reinstalling.

When replacing the retainer screen, a slight force may be required to push the cooling coil into the air cylinder so that the pins may be fitted into place.

Be sure that all piping connections are tight.

If the motor was replaced or if motor leads were disconnected, be sure that pump rotation is proper before starting operation. The air pump should rotate in a clockwise direction, as viewed from the drive shaft end.

General

Keep the motor and other components free from dust and dirt to prevent overheating and damage. Motor lubrication should follow manufacturer's recommendations.

U. HEAD INSPECTION AND MAINTENANCE

⚠WARNING

Disconnect and lock out electrical power and fuel to the boiler before opening either the front or rear head. Failure to follow these instructions can result in electrical shock and serious personal injury or death.

A good seal between the heads and the pressure vessel is necessary to prevent leakage of combustion gases, loss of heat, and to aid in obtaining operating efficiency. Leaks can also cause hot spots that can lead to premature refractory failure and/or damage to the door metal.

When opening the heads, either for routine maintenance or for an annual inspection, do not do so when the boiler or the door is hot. The refractory will hold its temperature for some time and exposure to ambient temperature or rapid cooling may cause refractory cracking and/or harm to the boiler and head metal.

When opening the front head of a CB-LE, either remove the motor and fan cassette assembly and swing the assembly away from the head. Or, with the motor and cassette in place, remove the motor to davit arm connecting bolt to allow swinging the motor and fan cassette with the head.

After confirming that the electrical power and fuel are locked in the **off** position, disconnect the fuel lines (see Figure 8-23). Disconnect the main gas line coupling, the pilot line and the sight port air line. If the boiler is oil fired, remove the supply and return oil lines and the oil pilot line if necessary. Remove the head bolts and swing the head.

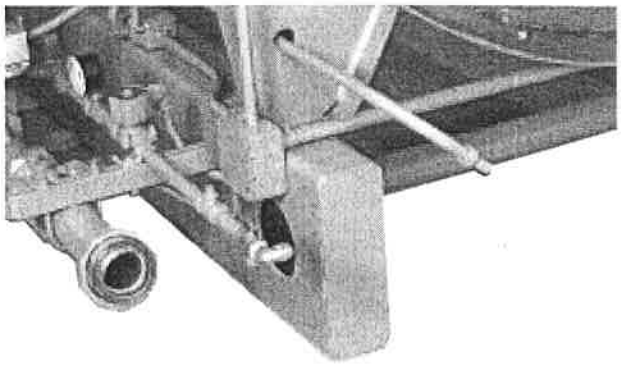

Figure 8-23: Disconnect Fuel lines and Sight Glass Cooling Tube.

The opened head should be supported by blocking or jacking to eliminate possible deformation of the head or hinge area.

Prior to closing, check all gaskets and sealing surfaces. If the door gasket is hard or brittle, it should be replaced. The fiberglass ropes should not be reused. The head flange area and the tube sheet area of the baffle seal should be clean and free of old sealing material, scale, etc. Be sure that all of the gasket retaining fasteners are in place.

Remove the old rope and insulating cement from the baffle tile or refractory. Be careful not to chip or crack the refractory. When sealing the rear head the rope is placed in the groove of the monolithic design and on top of the lip of the tile baffle type construction.

Attach a new length of 1-1/4" diameter fiberglass rope (P/N 853-982) to the baffle. Be certain that it is properly positioned and use a rapid setting adhesive (P/N 872-481) to hold it in place.

Note: A boiler built for high pressure design, such as 150 psi or higher steam or for 60 psi or higher hot water, is constructed with a flanged tube sheet that fits inside the boiler shell and door flange.

The area between the curved portion of the sheet and the flange is packed with fiberglass rope and covered with cement to fill the void and to provide a smooth sealing area.

Replacement is not normally necessary, but, if it is, completely remove the old material. Firmly caulk a layer of 1/2" diameter rope (P/N 853-996) into the area. Tamp a second layer of 1" diameter rope (P/N 853-999) over the first layer. Apply a coating of insulating cement pulp (P/N 872-26) over the ropes to form a smooth surface. Allow the cement pulp to harden before closing the head.

T. REFRACTORY

The boiler is shipped with completely installed refractory. The refractory consists of the cast dry oven, furnace liner (Figure 8-25), and the rear door (Figure 8-27). Normal maintenance requires little time and expense, and prolongs the operating life of the refractory.

Preventive maintenance through periodic inspection will keep the operator informed of the condition of the refractory, and will guard against unexpected and unwanted downtime and major repairs.

Frequent wash coating of the refractory surfaces is recommended. High-temperature-bonding, air-dry type mortar, diluted with water to the consistency of light cream, is used for wash coating. Recoating intervals will vary with operating loads and are best determined by the operator when the boiler is opened for inspection.

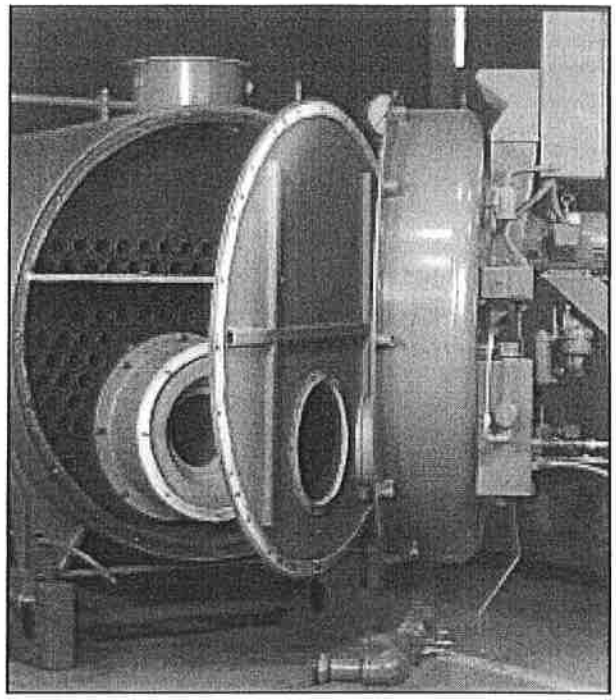

Figure 8-24: Open Front Head and Inner Door

Furnace Liner

Maintenance consists of occasional wash coating of the entire liner. Face all joints or cracks by applying high temperature bonding mortar with a trowel or fingertips. Wash coating should be done as soon as cracks are detected.

Should segments of the liner burn away or fall out, replace the entire refractory. Any refractory that may break out should be removed as soon as detected so that it will not fuse to the bottom of the furnace and obstruct the flame.

If replacement is necessary, refer to Chapter 9 and order proper replacement materials. Remove existing refractory. Thoroughly clean the furnace to remove all old refractory cement or other foreign material to ensure the new liner seats firmly against the steel. Inspect the furnace metal.

Depending upon the design pressure of the boiler, the furnace may be of the corrugated type. It is necessary to fill in the corrugation valleys under the furnace liner tile from 4 o'clock to 8 o'clock with insulating cement. The liner tile should be fitted tightly against the crown of the corrugation.

Note: The area between the dry oven and the throat tile requires a good seal. An improper or poor seal allows air leaks that can cause overheating and burning of the dry oven. The area should be inspected semi-annually. Contact your local Cleaver-Brooks representative for information and service.

Liner Installation

The furnace lining is shown in Figure 8-25 & 8-26. The dry oven is bolted directly to the front tube sheet.

Since the thickness of the furnace metal varies with the boiler design pressure, a shim of appropriate thickness must be used to compensate for the variance. A layer or two of insulating board or equal, or a bed of refractory material, may be used to center the ring.

The liner tile can be fitted tightly against the furnace, since the finished diameter is not critical.

It is recommended that the tile be dry-fitted, match-marked, removed, and then reinstalled with the proper amount of refractory cement. Thin joints (less than 1/16") are desirable. Generally, it will be necessary to shave a portion from one or more tiles to obtain a fit. If a fill piece is required, cut it to fit and install the piece at the bottom of the furnace.

Allow refractory to air dry as long as possible. If immediate use is required, fire intermittently at a low rate for several hours to thoroughly dry the refractory.

Inspect the baffle gasket and replace if necessary.

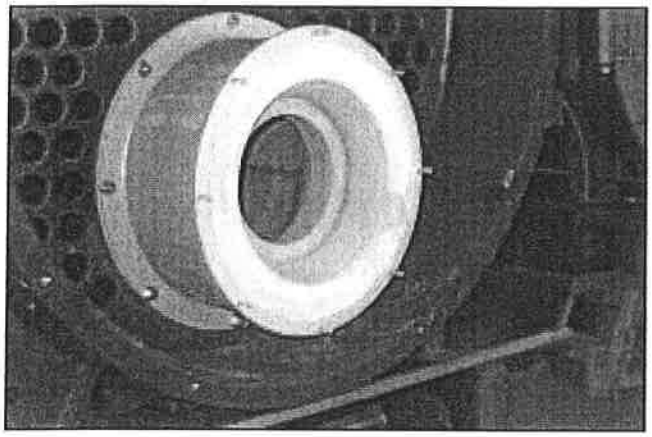

Figure 8-25: Dry Oven

Installing Precast Dry Oven

1. Glue fiberglass rope to the backside of the dry oven (item #2) around the outside dia. of precast dry oven (item #1) as shown below.
2. Apply trowleze to end of furnace tiles.
3. Fit up the dry oven and tighten in place.
4. Remove excess cement.

ITEM	REQ.	PART NO.	DESCRIPTION	OPTION
1	1	459B513	OVEN, DRY - PRECAST	A3
2	1	32A107	GASKET - DRY OVEN	A3
3	8	841-513	STUD - MACH.	
4	8	952-108	WASHER - STD. 1/2"	
5	8	869-29	NUT - HEX, BRASS 1/2" - 13	
6	1	32A106	GASKET - DRY OVEN	A3
7	8	952-106	WASHER - STD. 3/8"	
8	8	869-37	NUT - HEX. BRASS 3/8" - 16	
9	5#	872-390	CEMENT - TROWLEZE H-124	A3
10	17	94A203	TILE, FURNACE	A3
11	6 FT	872-635	3/4" SQ. FIBERGLASS ROPE	A3

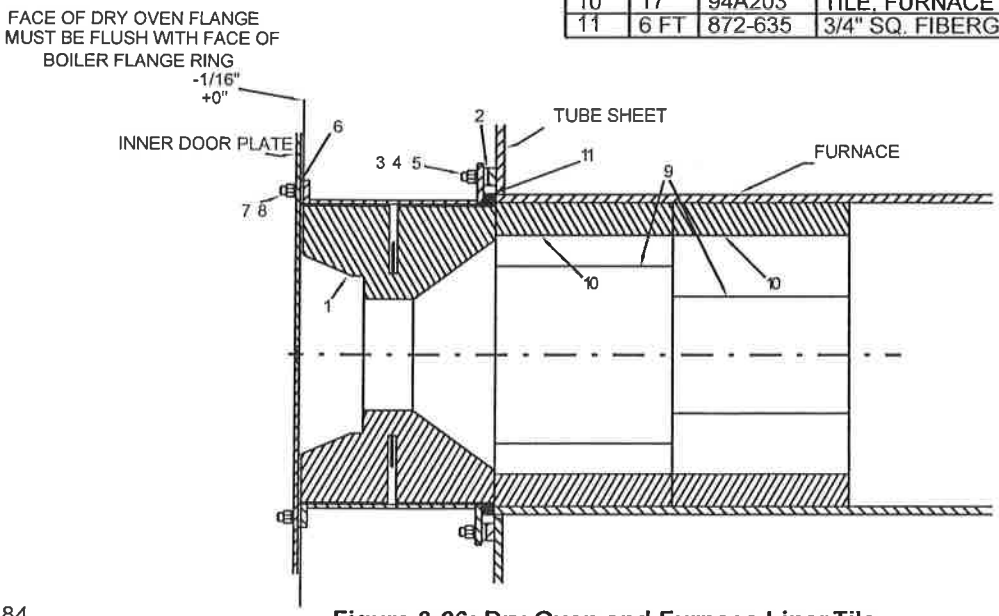

Figure 8-26: Dry Oven and Furnace Liner Tile

Sealing and Closing Inner Door and Front Head

Inspect the second to third pass baffle gasket, if it is brittle, cracked or broken replace the gasket (see Figure 8-27).

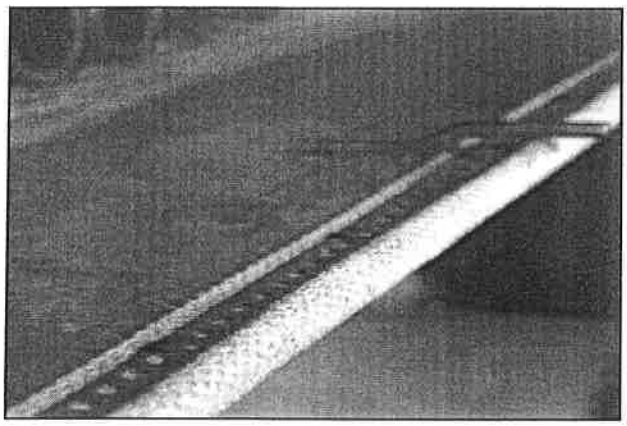

Figure 8-27: Second to Third Pass Baffle and Gasket

Inspect the second to third pass baffle for a good seal at the tube sheet and the vessel (see Figure 8-29).

If necessary scrape old cement away, clean all old cement out and wire brush the sealing area to assure an effective bond between the high temperature cement and the steel. Be sure not to obstruct the tubes with excess cement.

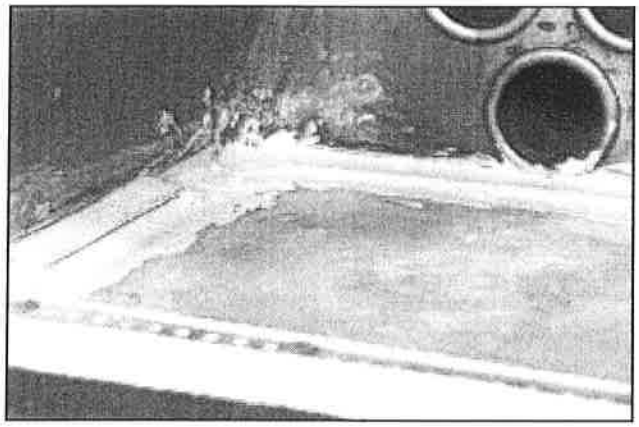

Figure 8-28: High Temperature Cement on Baffle Weld Area

Scrape the old gasket material off the vessel to inner door sealing area and the dry oven to inner door sealing area. Using a wire brush clean off any excess gasket material or rust. Using Spray Tack spray the area to hold the gasket in place prior to closing the inner door. Use new fasteners when replacing the tadpole gasket. Apply the 1/2" rope gasket to the inside of the tadpole gasket. Be sure the rope gasket is tight against the inside of the tadpole gasket. Cut the tadpole gasket and the rope to provide a tight seal between the ends. Coat the door gasket with an oil and graphite mixture. Use 1/2" diameter rope (P/N 853-996) for a boiler of low pressure design. Use 1" diameter rope (P/N 853-999) for a high pressure boiler.

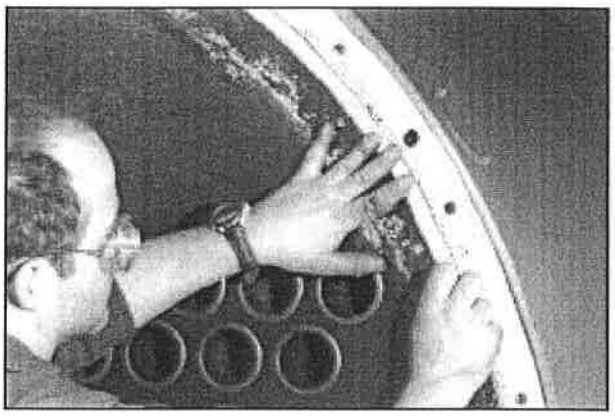

Figure 8-29: Rope Gasket Glued against Tadpole Gasket

Apply a layer of pulp over the rope and the inside of the tadpole gasket (see Figure 8-31). Smooth to approximately 1 inch thick and 2 inches wide.

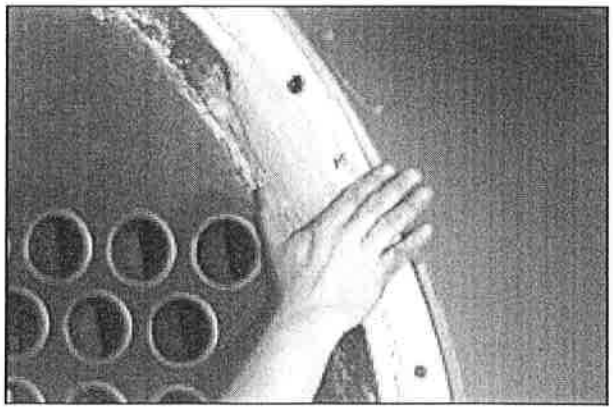

Figure 8-30: Apply Pulp Over Rope and Tadpole Gasket

Inspect the condition of the blanket insulation on the inner door. Replace the insulation if it's found to be loose or torn. Replace the gasket on the inner door and secure with new split clips.

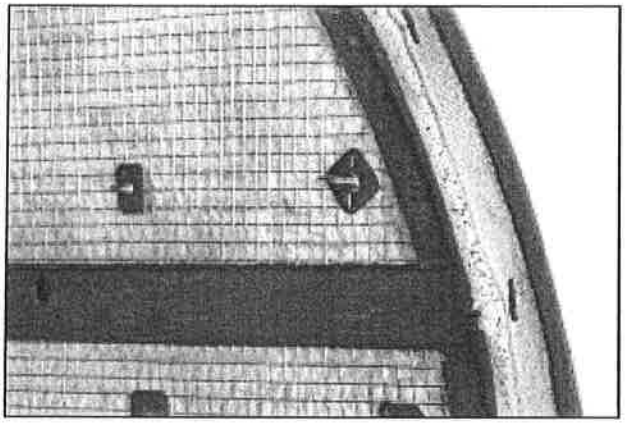

Figure 8-31: Inspect Inner Door

Close the inner door and bolt securely in place. Tighten the bolts evenly. Tighten the bolts evenly around the dry oven using a star pattern.

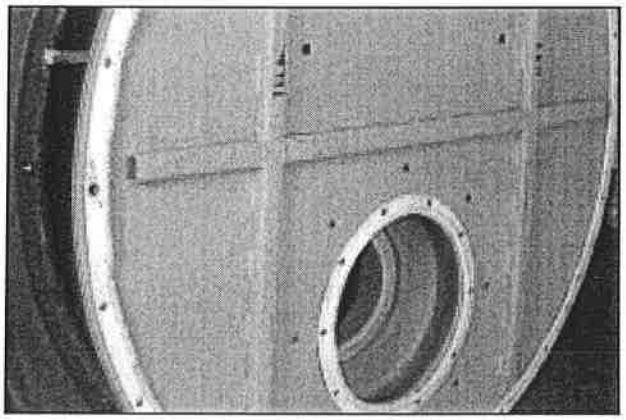

Figure 8-32: Closing Inner Door

Examine the condition of the burner housing and that all necessary burner setup is correct. Be sure the oil piping and atomizing air piping are in good condition and not leaking, replace if necessary. Clean the cooling fins on both the oil and atomizing air cooling tubes.

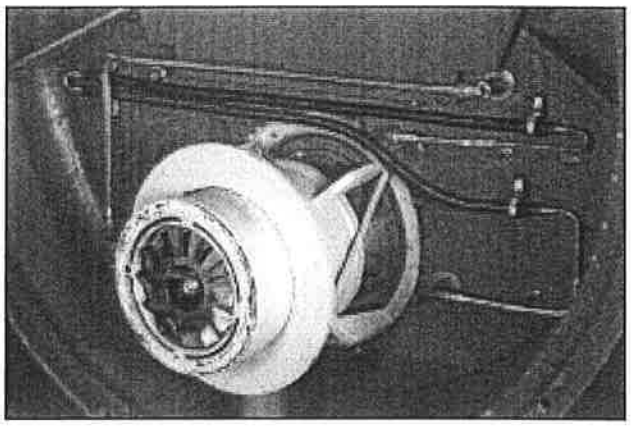

Figure 8-33: Inspect and Clean Inside Front Head and Components

Using high temperature cement, fillet the corner of the dry oven to burner housing contact area. Do not apply the cement more than 1/2 inch out from the corner. Applying too much cement in this area could block the annuls burner outlets.

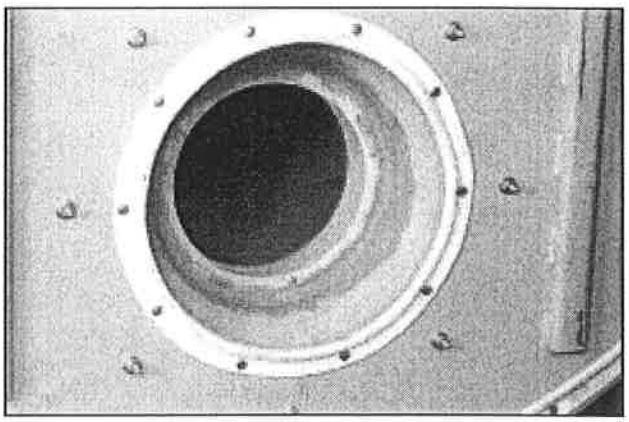

Figure 8-34: Fillet Dry Oven Contact Area

Swing the front head in place. A long punch or prybar might be necessary to align the bolt holes. Insert bolts hand tighten. After all bolts are threaded, continue tightening in a star pattern.

After all bolts are secured to XXXFoot Pounds, Tighten the upper and lower hinge nuts evenly to pull the door securely against the vessel. Repeat the star tightening sequence on the head bolts, to verify gasket sealing.

Do not overtighten. Tighten alternate bolts until the door is secured and gas tight. After the boiler is back in operation, retighten the bolts to compensate for any expansion.

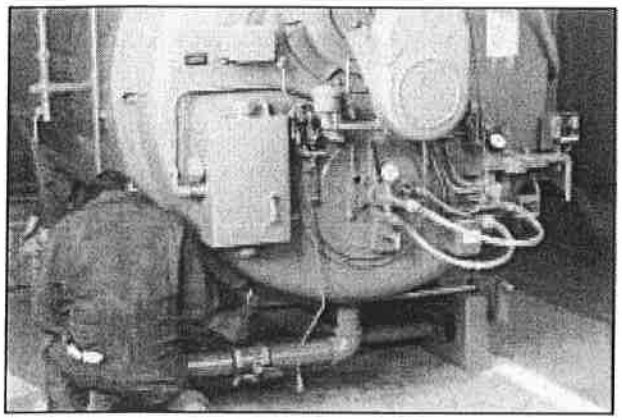

Figure 8-35: Close and Tighten Front Head

Figure 8-36: Tighten Hinge Bolts

Rear Door

The rear door is a steel shell containing horizontal baffle and lined with insulation material and castable refractory (see Figure 8-38 & 8-39).

Burned or discolored paint on the outer surface of the door does not necessarily indicate refractory trouble, but may be an indication of other conditions, such as:

1. Leaking gaskets.
2. Improper seal.
3. Door retaining bolts insufficiently or unevenly tightened.
4. The air line to the rear sight tube may be blocked or loose.
5. Door was repainted with other than heat resistant paint.

Therefore, before assuming that the refractory requires reworking:

1. Check the condition of the tadpole gasket and rope seal.
2. Check the condition of the insulating cement protecting the tadpole gasket.
3. Check the horizontal baffle tile for large cracks, breaks, chipped corners, etc.
4. Check for cracks in the castable refractory at ends of the baffle tile.
5. Check the tightness of the door bolts.
6. See that the air line to the sight tube is clear, and that the connections are tight. If necessary, blow the line clear with an air hose.

It is normal for refractories exposed to hot gases to develop thin "hairline" cracks. It by no means indicates improper design or workmanship. Since refractory materials expand and contract with changes in temperature, they should be expected to show minor cracks due to contraction when examined at low temperatures. Cracks to approximately 1/8" across may be expected to close at high temperature. If there are any cracks that are relatively large (1/8" to 1/4" in width), clean and fill them with high-temperature-bonding mortar. Any gap that may show between the castable refractory and the baffle tile should be filled in a similar manner.

After opening the rear door, clean the flange with a scraper or wire brush. Clean the surface of the refractory carefully with a fiber brush to avoid damaging the surface. Clean the mating surfaces of the baffle tile and the boiler shell. Remove all dried sealing material. Wash-coat the lower half of the rear door refractory prior to closing.

The upper half of the door contains a lightweight insulating material, similar to that used in the inner door. A thin wash-coat mixture, applied gently with a brush, is helpful in maintaining a hard surface.

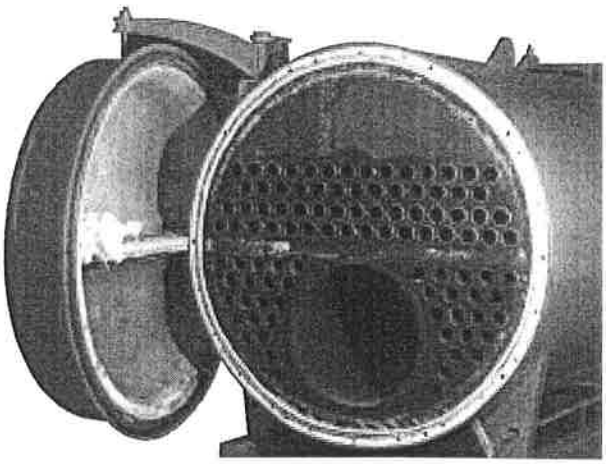

Figure 8-37: Rear Door Open

If the baffle tile or the refractory require replacement, contact your local Cleaver-Brooks authorized representative.

ITEM		PART #	DESCRIPTION	USED ON
1	1	32-A-105	GASKET FRONT AND REAR HEAD	15#-200#
		32-A-2547	GASKET FRONT AND REAR HEAD	250#
2	16 FT.	853-996	ROPE - 1/2" DIA.	
3	10 LBS	872-26	CEMENT - FIBEREX SUPERCOTE	
	25 LBS	872-26	CEMENT - FIBEREX SUPERCOTE	125S,150S,175S

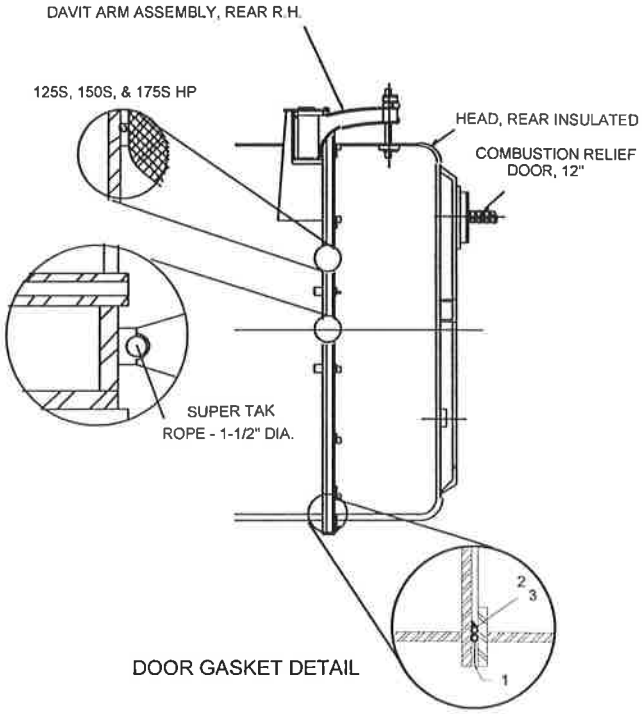

Figure 8-38: Baffle Construction

V. LUBRICATION

Electric Motors

Manufacturers of electric motors vary in their specifications for lubrication and care of motor bearings; their specific recommendations should be followed.

Ball-bearing-equipped motors are pre-lubricated. The length of time a bearing can run without having grease added will depend upon many factors, including the rating of the motor, type of motor enclosure, duty, atmospheric conditions, humidity, and ambient temperatures.

Complete renewal of grease, when necessary, can be accomplished by forcing out the old grease with the new grease. Thoroughly wipe those portions of the housing around the filler and drain plugs (above and below bearings). Remove the drain plug (bottom) and free the drain hole of any hardened grease which may have accumulated. With the motor not running, add new grease through the filler hole until clear grease starts to come out of the drain hole. Before replacing the drain plug, run the motor for 10 to 20 minutes to expel any excess grease. The filler and drain plugs should be thoroughly cleaned before they are replaced.

The lubricant used should be clean and equal to one of the good commercial grades of grease locally available. Some lubricants that are distributed nationally are:

- Gulf Oil - Precision Grease No. 2
- Humble Oil - Andok B
- Texaco - Multifak No. 2
- Phillips - 1B + RB No.2
- Fiske Bros. - Ball Bearing Lubricant
- Standard/Mobil - Mobilux No. 2

Control Linkage

Apply a non-gumming, dripless, high temperature lubricant, such as graphite or a silicone derivative to all pivot points and moving parts. Work lubricant in well and wipe excess. Repeat application at required intervals to maintain freedom of motion of parts.

Solenoid and Motorized Valves

Solenoid valves and motorized valves require no lubrication.

IFGR Lubrication

Motors should be lightly lubricated at startup, using the grease specified below or equivalent. Lubricate the motor as follows:

⚠WARNING

Disconnect and lock out electrical power to the boiler before lubricating the fan motor. Failure to follow these instructions can cause injury or death.

1. Disconnect and lock out electrical power to the boiler.
2. Wipe clean all grease fittings (fill and drain fittings).
3. Remove the fill and drain plugs from the motor end cap.
4. Free the drain hole of any hard grease. (Use a piece of wire, if necessary.)
5. Add grease using a low-pressure grease gun.

   Note: The amount and type of grease is very important. Only enough grease should be added to replace the grease used by the bearing. Either too much or too little grease can be harmful. The grease cavity should be filled 1/3 to 1/2 full, using Chevron SRI 2 grease or equivalent. Shell Dolium R is a suitable substitute lubricant.

6. With the fill and drain plugs still removed, apply electric power to the boiler, start the motor, and let it run for approximately 30 minutes.
7. Turn boiler off.

⚠WARNING

Disconnect and lock out electrical power to the boiler before lubricating the fan motor. Failure to follow these instructions can cause injury or death.

8. Disconnect and lock out electrical power to the boiler.
9. Wipe excess grease from the motor, and install the fill and drain plugs. Motor is ready for operation.
10. Reconnect electrical power.

W. OIL HEATERS - ELECTRIC, STEAM, HOT WATER

An annual maintenance of the heaters consists primarily of removing the heating element from the shell and scraping any accumulation of carbonized oil or sludge deposits that may have collected on the heat exchanging surfaces.

Before breaking any of the electrical connections to the electric heating elements, mark all wires and terminals to assure rapid and correct replacement of wires.

Finish the cleaning process with a cleaning solvent to cut all hardened deposits from the heater element. Because of the insulating effect of carbon and sludge, periodic cleaning is necessary to prevent overheating of the elements. If operation of the heater becomes sluggish, examine the elements at once and clean as required.

Inspect the shell or tank each time the heater is removed. Flush all accumulated sludge and sediment from the tank before reinstalling the heater.

The condensate from steam oil heaters must be safely discharged to waste. The waste should be checked periodically for any traces of oil that would indicate leaking tubes within the heater.

The hot water oil heater (Figure 8-40) contains a heat transfer solution. Oil flows through an inner tube while boiler water surrounds the outer tube. The space between the two tubes is filled with the heat transfer solution and is connected to an expansion chamber on the rear of the heater. A visual indicator on the chamber reveals the presence of any oil if an oil leak occurs.

A 50/50 solution of permanent antifreeze and water is generally used as the heat transfer solution. If there is no danger of freezing, plain water may be used as a replenishment if necessary to refill.

Evidence of oil in either the steam heater condensate or in the water heater indicator demands prompt repairs.

X. COMBUSTION

The frequency of burner adjustments depends upon several factors, including; type of burner, type of fuel, load conditions, ambient temperature, climatic variables, and general maintenance practices.

The air-fuel ratio should be checked monthly in order to alert the operator to losses in efficiency, which do not produce visible flame change. Any time maintenance is performed on the burner linkage, the air-fuel ratio should be checked. Readjustment of the burner may be required due to variations in fuel composition. A combustion analyzer should be used to adjust air-fuel ratio for maximum operating efficiency. If your burner requires adjustments, contact your local Cleaver-Brooks authorized representative for assistance.

Table 8-2 CB-LE (IFGR) Maintenance

Daily	• Check visually for free movement of IFGR linkage.
Quarterly	• Manually check for free movement of IFGR linkage. • Inspect and clean IFGR damper (oil-fueled system). • Inspect and clean fan and burner (oil-fueled system). • Grease fan motor.
Semi-Annual	• Inspect and clean IFGR damper (gas-fueled system). • Inspect and clean fan and burner (gas-fueled system). • Open motor/fan cassette to check for free movement of IFGR linkage and damper assembly.
Annual	• Inspect fan impeller. • Check emissions. • Change inlet gasket.

Y. AIR PUMP BELT

The V-belt driving the air pump requires no servicing and no preservatives or dressing compounds should be used. Belts normally stretch with use and proper tension should be maintained. Do not apply excessive tension. The air pump can be moved the small distance necessary for belt adjustment without any change of piping.

On a combination fired unit it is an acceptable practice to remove the belt when gas is being used for extended periods. It is not absolutely necessary to do this, however pump and belt life will be extended if the belt is removed.

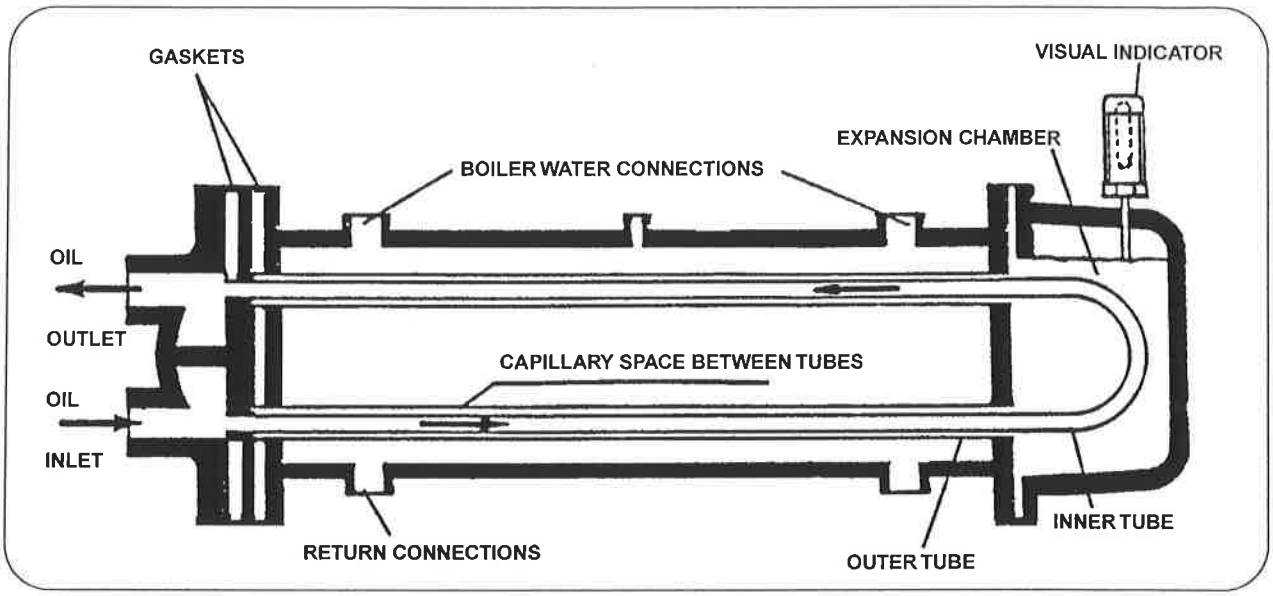

Figure 8-39: Circuit Layout of Hot Water Oil Heater

Windbox Temperature (Typical) - Natural Gas	
60 PPM	130°-140° F
30 PPM	160°-175° F
25 PPM	185°-195° F
20 PPM	195°-210° F

DAILY	MONTHLY	SEMI-ANNUALLY	ANNUALY
• Check water level • Check combustion visually • Blow down boiler • Blow down water column • Record feedwater pressure/temperature • Record flue gas temperature • Record oil pressure and temperature • Record gas pressure • Treat water according to the established program • Record atomizing air pressure	• Inspect burner • Inspect for flue gas leak • Inspect for hot spots • Check cams • Check for tight closing of fuel valve • Check fuel and air linkage • Check indicating lights and alarms • Check operating and limit controls • Check safety and interlock controls • Check for leaks, noise, vibration, unusual conditions, etc. • Check low water cutoff operation	• Clean low water cutoff • Clean oil pump strainer, filter • Clean air cleaner and air/oil separator • Inspect refractory • Remove and clean oil preheater • Check air pump coupling alignment • Inspect / repair burner housing to refractory seal	• Clean fireside surfaces • Clean breeching • Inspect waterside surfaces • Check operation of safety valves

Figure 8-40: Recommended Boiler Inspection Schedule

Notes

Notes

CHAPTER 9

CUSTOMER SERVICE AND PARTS

FURNISH COMPLETE INFORMATION WHEN ORDERING PARTS - When ordering parts or spares, give the description and the quantity of parts desired, together with the complete nameplate data, including all electrical requirements.

WHERE TO ORDER PARTS - Repair and replacement parts should be ordered from your local Cleaver-Brooks authorized representative.

BOILER HORSEPOWER	SHELL DIAMETER
400 - 800	96"
250 - 350	78"
125 - 200	60"
50 - 100	48"
15 - 100	36"

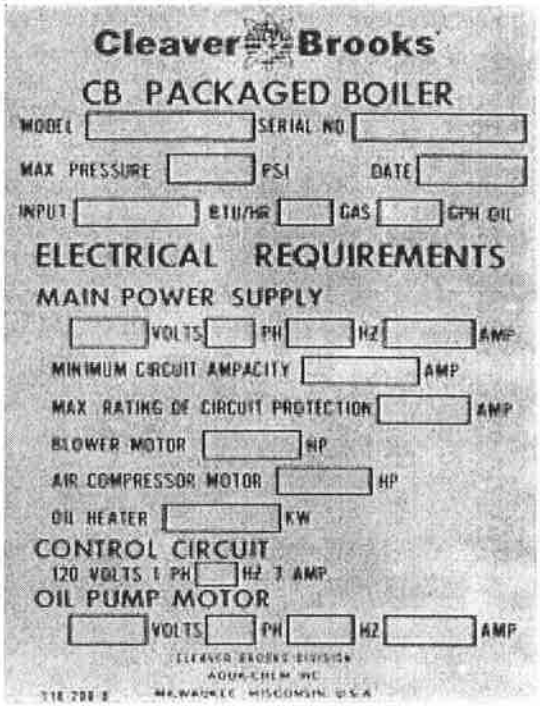

Contact your local Cleaver-Brooks authorized representative for prompt supply of replacement parts.

Table Of Contents

Front Door, Inner Door 3-5
Rear Head 6
Dry Oven & Liner Tile 7, 8
Impellers 9, 10
Jackshafts, Mod Motor, Air Damper Linkage 11, 15
Burner Drawer 16, 17
Burner Housing 18, 19
Flame Control 20, 21
Entrance Box & Fuses 22, 23
Front Head Electrical 24,25
Electric Oil Heater 26, 27
Oil Emission Steam Electric Heater 28-30
Air Compressor /Air Line Piping 31-34
Light Oil / Air Piping Front Head 35, 36
Gas Trains 37, 38
Pressure Controls 39
Temperature Controls 40, 41
Water Column 42, 43

QTY	CB PART #	DESCRIPTION
FIRESIDE		
1	880-216	KIT, GASKET
WATERSIDE		
1	880-211	KIT, GASKET

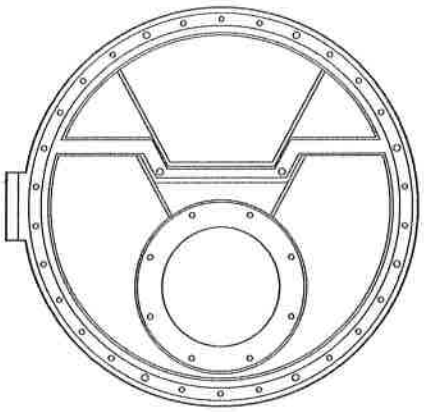

REF. DWG. B

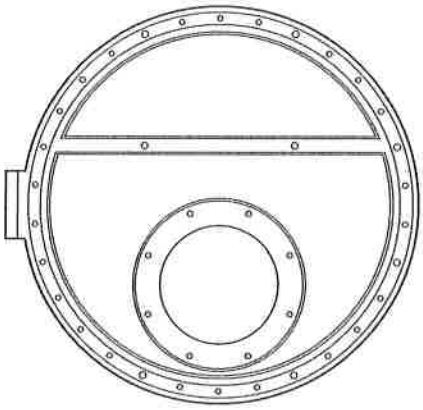

REF. DWG. D

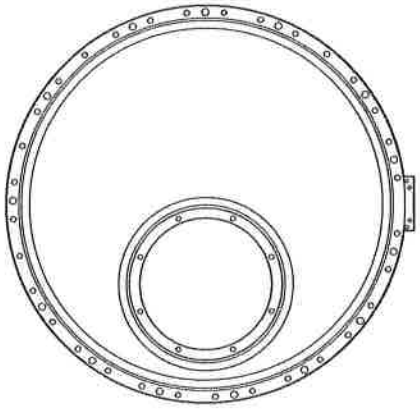

REF. DWG. E

QTY	CB PART # RH DOOR	CB PART # LH DOOR	DESCRIPTION
1	465-1330		INNER FRONT DOOR Insulated
1		465-1331	INNER FRONT DOOR Insulated
1	457-2868		INNER FRONT DOOR Plate Only
1		457-2869	INNER FRONT DOOR Plate Only

Inner Front Door - Model CB

ITEM	REQ.	PART NO.	DESCRIPTION
1	*	872-500	BULK INSULATION, BLANKET, 1 1/2" THK. 2400°. 8#
2	65	903-297	PIN, WELDING, #10 GA. X 4" LG. ST. STL
3	65	828-39	CLIP, WELDING ST. STL
4	*	872-443	RIGIDIZER, COATING CEMENT, CERA-PREG (SEE NOTE 2)
5	1	872-362	BULK, INSULATION, BLANKET 1" THK. X 2" X 59-1/2" LG
6	12 OZ	797-1813	ADHESIVE
7	1	904-12	GASKET, TAPE 1/8" X 2" X 59-1/2" LG.
8	35 SQ	930-135	SCREEN ST. STL

* ESTIMATED 15 SQ. FT. OF ITEM 1 REQUIRED.
ESTIMATED 90 OZ. OF ITEM 4 REQUIRED.

NOTES:

1. ITEM #2 PINS TO BE SPACED ON 4" TO 5" MAX. CENTERS.
2. ITEM #4 RIGIDIZER MUST BE DILUTED W/ EQUAL AMOUNT OF WATER (90 OZ.) TO A 50:50 SOLUTION PRIOR TO APPLYING TO SURFACE OF INSULATING BLANKET AND SCREENING.
3. INSTALL ITEM 5 FIRST, THEN COVER WITH ITEM 7.

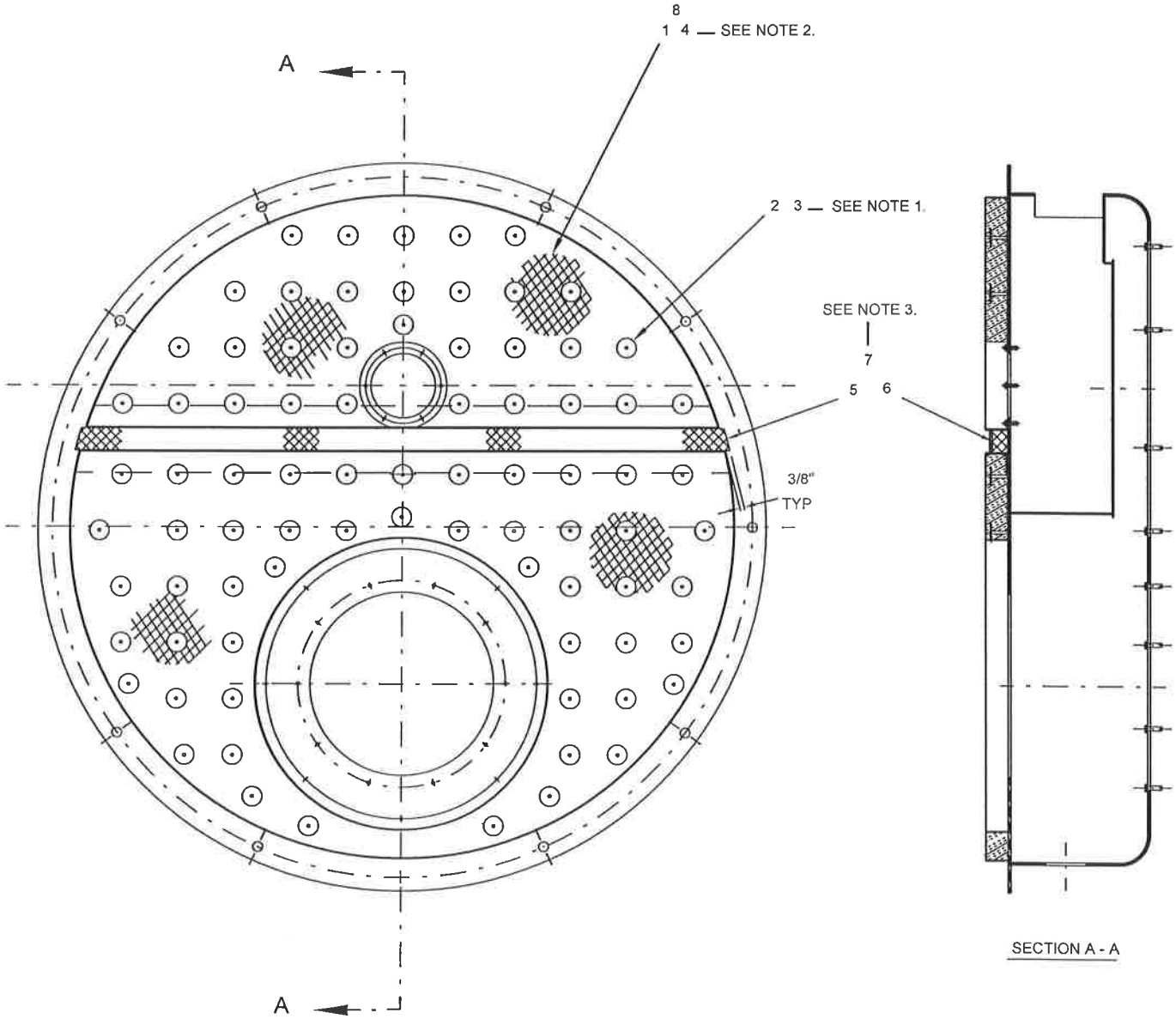

Insulated Front Head Inner Door - Model CB-LE

ITEM	QTY	PART NO.	DESCRIPTION
1	SEE TABLE	872-688	INSULATION, INSWOOL, 1/4" THK
2	SEE TABLE	919-51	ADHESIVE, SCOTCHGRIP 3M, #1300
3	100	903-297	PIN, WELDING, #10 GA. X 2-1/2" LG., ST. STL.
4	100	828-39	CLIP, WELDING, ST. STL.
5	150 OZ	872-443	RIGIDIZER, COATING CEMENT, CERA-PREG **
6	1	65B804	RETAINER, INSULATION. 60" DIA. "LE"
7	5	841-690	STUD, 3/8"-16 X 1" LG.
8	5	869-30	NUT, HEX, 3/8"-16
9	5	952-83	LOCKWASHER, 3/8"
10	25 SQ. FT.	930-135	SCREEN, 1/2" 19 GA. ST. STL.

** SEE NOTE 3

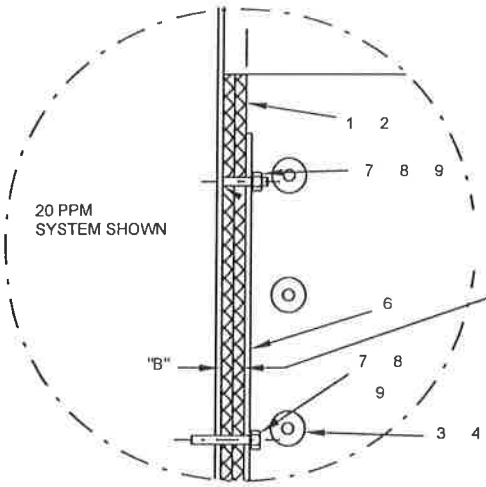

ASSEMBLY P/N	IFGR RATE	DIMENSION "B"	ITEM #1 QTY	ITEM #2 QTY
465C1675	30-25 PPM	.25" SINGLE THICKNESS	28 SQ FT	150 OZ.
465 1679	20 PPM	.50 DOUBLE THICKNESS	56 SQ FT	300 OZ.

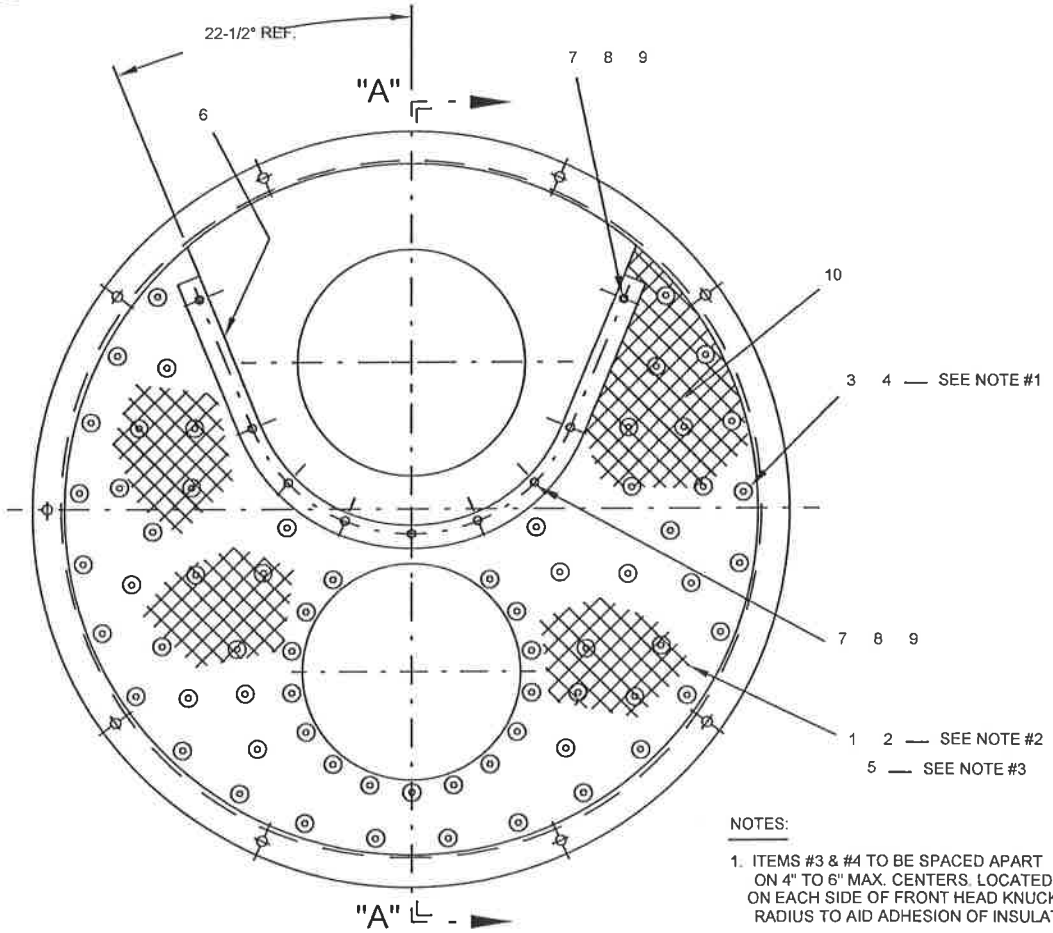

INSIDE VIEW OF HEAD

NOTES:

1. ITEMS #3 & #4 TO BE SPACED APART ON 4" TO 6" MAX. CENTERS. LOCATED ON EACH SIDE OF FRONT HEAD KNUCKLE RADIUS TO AID ADHESION OF INSULATION.
2. CUT AWAY INSULATION FOR AIR PROVING SWITCH, FGR LINKAGE, & REAR HEAD COOLING LINE CONNECTIONS.
3. ITEM #5 RIGIDIZER MUST BE DILUTED W/ EQUAL AMOUNT OF WATER (150 OZ) TO A 50:50 SOLUTION PRIOR TO APPLYING.

Insulated Front Head - Model CB-LE

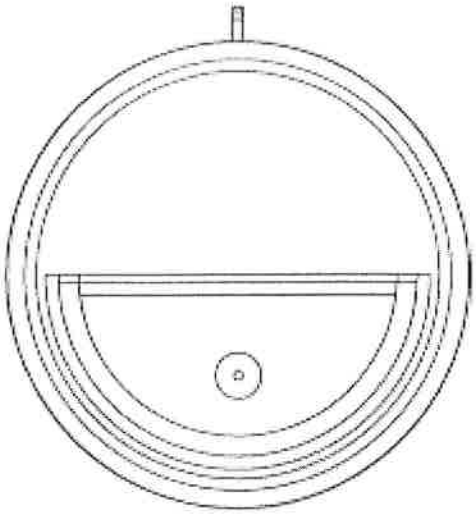

REF. DWG"A"

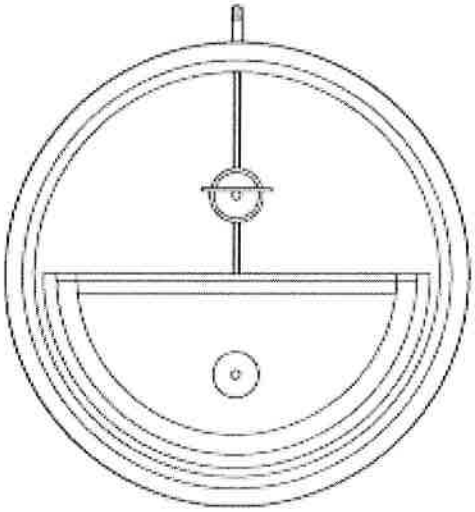

REF. DWG. B

QTY	CB PART # WITH DAVIT TO 200 psi	DESCEIPTION	250 psi and up
1	465-1537	REAR HEAD W/7" RELIEF DOOR	465-1987
1	465-153	REAR HEAD W/12" RELIEF DOOR	465-1988
1	465-1632	REAR HEAD W/O RELIEF DOOR	465-1986

Insulated Rear Head

ITEM	QTY	PART NO.	DESCRIPTION	USED ON
1	1	49-C-8	DRY OVEN	-
2	1	32-107	GASKET, DRY OVEN (SEE DWG 32-B-106)	-
3	8	841-513	STUD, MACH., 1/2" - 13 X 2-1/8" LG. (T- 5/8" #3 THD., N- 1-1/8" #2 THD.)	-
4	8	952-108	WASHER, STD., 1/2"	-
5	8	869-29	NUT, HEX., 1/2" - 13, BRASS	-
6	1	32-B-106	GASKET, DRY OVEN	-
7	8	952-106	WASHER, STD., 3/8"	-
8	8	869-37	NUT, HEX., 3/8" - 16, BRASS	-
9	7#	872-390	CEMENT, JOINT MORTAR, TROWLEZE H-124	-
10	16	94-B-130	REFRACTORY BRICK, DRY OVEN	STD C.B.
	16	94-415	REFRACTORY BRICK, DRY OVEN (SEE 94-B-130)	F.G.R. ONLY
11	17	94-A-203	TILE, FURNACE	-

NOTES:

1. NO CUT BRICKS OR TILES TO BE INSTALLED IN UPPER 120° QUADRANT OF FURNACE OR DRY OVEN.
2. PACK ALL TILES AND BRICKS TIGHTLY W/ MALLET AND REMOVE ALL EXCESS CEMENT - 1/16" TYPICAL JOINT / 1/8" MAX. ONLY APPLIED BETWEEN TILES AND BRICKS. ALL TILES AND BRICKS SHOULD FIT TIGHT TO FURNACE OR DRY OVEN WALLS W/ NO EXPANSION SPACE BETWEEN.
3. STAGGER ALL CEMENTED JOINTS (SEAMS) BETWEEN ALL TILES AND BRICKS.
4. AFTER EACH HALF COURSE OF TILES OR BRICKS IS INSTALLED, CLEAN UP EXCESS CEMENT AND FILL IN ANY OPEN JOINT (SEAM) AREAS.
5. FOR 60" DIA. C.B. STANDARD BOILER USE BRICKING TOOL #98-C-282. FOR 60" DIA. F.G.R. BOILER USE BRICKING TOOL #98-283 (SEE DWG. 98-C-282).
6. FACE OF ITEM 1 (DRY OVEN) FLANGE MUST BE FLUSH W/ FACE OF BOILER FLANGE RING

INSTALLATION PROCEDURE

NOTE: THE FOLLOWING PROCEDURE IS TYPICAL FOR ALL C.B. STANDARD 60" DIA. AND F.G.R. BOILERS.

1. INSTALL TWO (2) ROWS OF ITEM 11 (TILES) INTO FURNACE.
   METHOD FOR INSTALLING TILES - START FROM BOTTOM OF FURNACE AND WORK AROUND BOTH SIDES TO TOP AND DETERMINE IF A CUT TILE IS NEEDED. IF A CUT TILE IS REQUIRED, CUT TO SUIT, SHIFT TILES, AND RE-INSTALL W/ CUT TILE LOCATED ON BOTTOM HALF OF FURNACE (SEE NOTE 6).
2. INSTALL ITEM 1 (DRY OVEN) AND ITEMS 2 & 6 (GASKETS) W/ STUDS, WASHERS, & NUTS AS SHOWN.
3. INSTALL BOTTOM HALF OF ITEM 10 (REFRACTORY BRICKS) INTO ITEM 1 (DRY OVEN).
4. ATTACH BRICKING TOOL (SEE NOTE 5) TO FRONT HEAD PLATE W/ WASHERS & NUTS AND FINISH BRICKING TOP HALF OF ITEM 1 (DRY OVEN) AS SHOWN.

   METHOD FOR INSTALLING TOP UPPER HALF OF REFRACTORY BRICKS - MEASURE OFF UPPER HALF OF DRY OVEN REFRACTORY BRICKS W/ TEMPLATE. MARK W/ CHALK AND DETERMINE IF A CUT BRICK IS NEEDED. IF A CUT BRICK IS REQUIRED, LOCATE BELOW THE 2 & 10 O'CLOCK POSITIONS. IF BRICK IS CUT, ANGLE OF CUT SURFACE SHOULD BE THE SAME AS ORIGINAL BRICK. IF CUT BRICK MEASURES LESS THAN 1/2" FULL WIDTH, CUT TWO (2) PIECES.
5. AFTER ITEM 9 (JOINT CEMENT) HARDENS (2 HOURS APPROXIMATE), REMOVE BRICKING TOOL.

Furnace Liner & Bricking Model CB and CB-LE

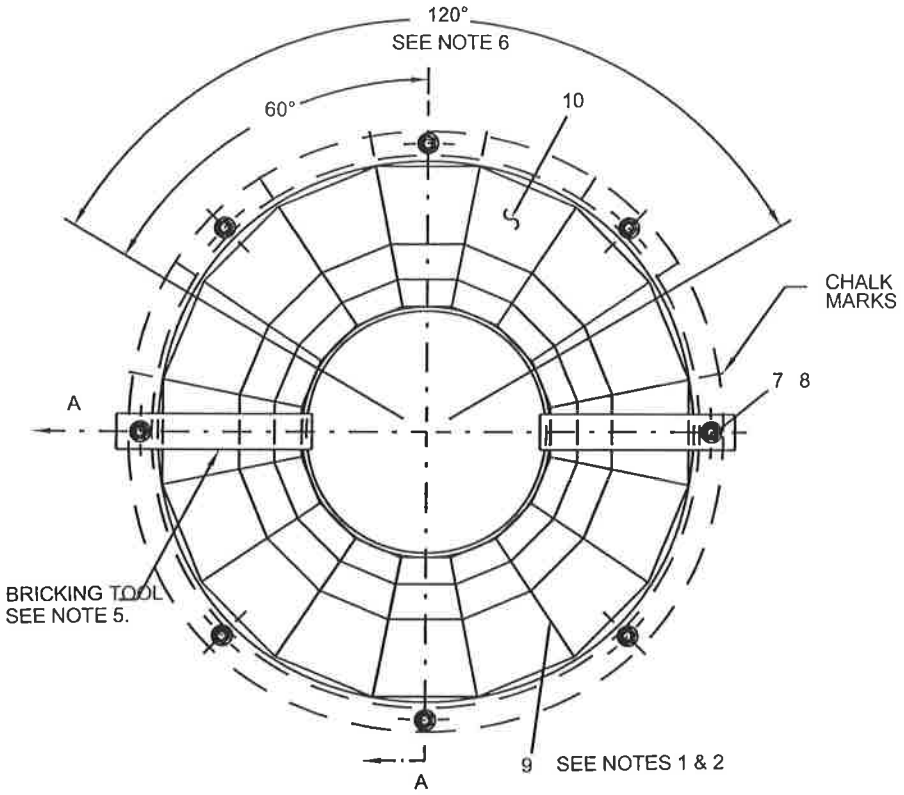

FRONT VIEW

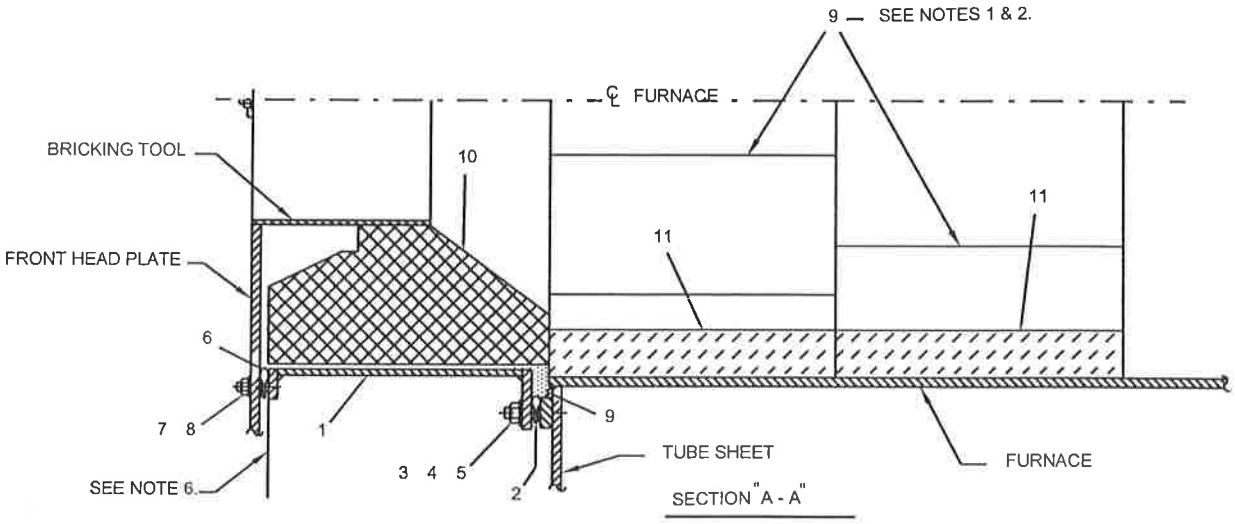

SECTION "A - A"

Furnace Liner & Bricking Model CB and CB-LE

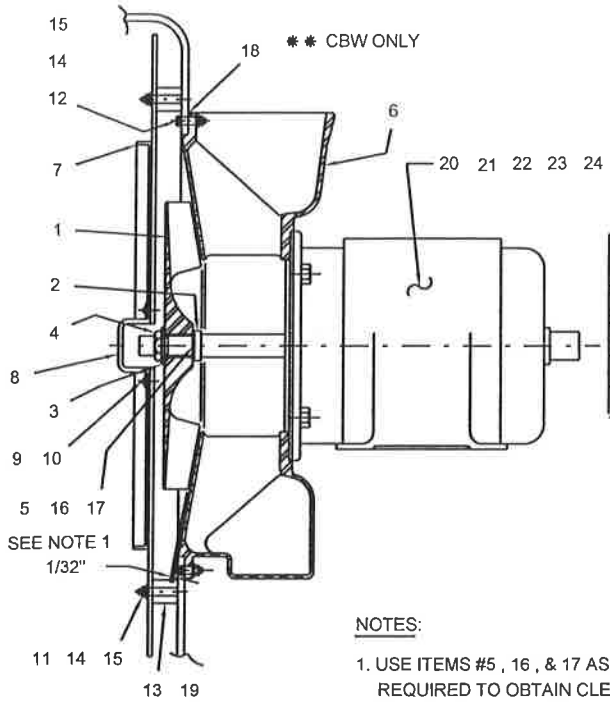

TABLE ITEM (1)				
BOILER H.P.	50 HZ	OP CODE	60 HZ	OP CODE
125	192-C-43	A7	192-C-42	A7
150	192-C-46	A7	192-C-43	A7
200	192-C-70	A7	192-C-46	A7

NOTES:

1. USE ITEMS #5 , 16 , & 17 AS REQUIRED TO OBTAIN CLEARANCE OF 1/32".

• MAXIMUM QUANTITY SHOWN, BASED ON REQUIREMENTS.

BLOWER MOTOR ITEM (20)

BOILER H.P.	MODEL	FUEL	60 HZ. MOTOR H.P.	60 HZ. ODP 200-220-460V	60 HZ. ODP 600V	60 HZ. TEFC 200-230-460V	60 HZ. TEFC & HI-EFF. 200-230-460V	50 HZ. MOTOR H.P.	50 HZ. ODP 220-380V
125	CB	ALL	5	894-2414	894-2415	-	894-3393	5	894-2416
150	CB	GAS	5	894-2414	894-2415	-	894-3393	5	894-2416
		OIL & COMB.	7-1/2	894-2419	894-2420	894-3216	894-3394	7-1/2	894-3167
200	CB	GAS	10	894-2435	894-2436	894-3141	894-3398	15	894-2453
		OIL & COMB.	15	894-2451	894-2452	894-3183	894-3400	15	894-2453

Motor & Impeller Model CB and CB-LE

ITEM	QTY	PART NO.	DESCRIPTION	OP CODE	USED ON
1	1	SEE TABLE	IMPELLER		SEE TABLE
2	1	77-61	SPACER, IMPELLER	A7	200HP @ 50HZ
3	1	77-A-184	SPACER, IMPELLER	A4,A7	200HP @ 60HZ
	1	77-61	SPACER, IMPELLER	A4,A7	200 H.P.@60 HZ.
4	1	869-119	NUT, SELF LOCKING, JAM	A4,A7	ALL
5	2	91-A-60	WASHER, SPACER	A4,A7	200HP @ 50HZ
	2	91-148	WASHER, SPACER, 0.010" (91-A-59)	A7	200HP @ 50HZ
6	1	85-D-43	SUPPORT, MOTOR, & AIR HOOD	A2	ALL
7	1	22-B-10	PLATE, DIFFUSER	A2	ALL
8	1	19-A-375	COVER, SHAFT	A4	ALL
9	2	860-114	SCREW,MACH..RD.HD.1/4"-20 X 5/16"LG.		ALL
10	2	952-92	LOCKWASHER, 1/4"		ALL
11	6	952-298	WASHER		ALL
12	8	868-159	CAPSCREW,HEX.HD.,3/8"-16 X 1-3/4"LG.		ALL
13	6	77-62	SPACER	A4	200 H.P.
	6	77-71	SPACER	A4	125 H.P. ONLY
	6	77-66	SPACER	A4	150 H.P. ONLY
14	* 30	952-93	LOCKWASHER, 3/8"		ALL
15	* 29	869-30	NUT, HEX., 3/8"-16		ALL
16	2	91-59	WASHER, SPACER, .005	A4,A7	ALL
17	*2	91-61	WASHER, SPACER, 1/16"	A7	ALL
18	1	32-A-690	AIR HOUSING GASKET	A2	ALL
19			NOT USED		
20	1	SEE TABLE	BLOWER MOTOR	A7	-
21	1	1-B-478	ADAPTER RING	A2	-
22	4	868-176	CAPSCREW, HEX HEAD, 1/2" x 2" LG.	-	-
23	4	952-94	LOCK WASHER, 1/2"	-	-
24	4	869-15	NUT, 1/2"	-	-

Motor & Impeller - Model CB and CB-LE

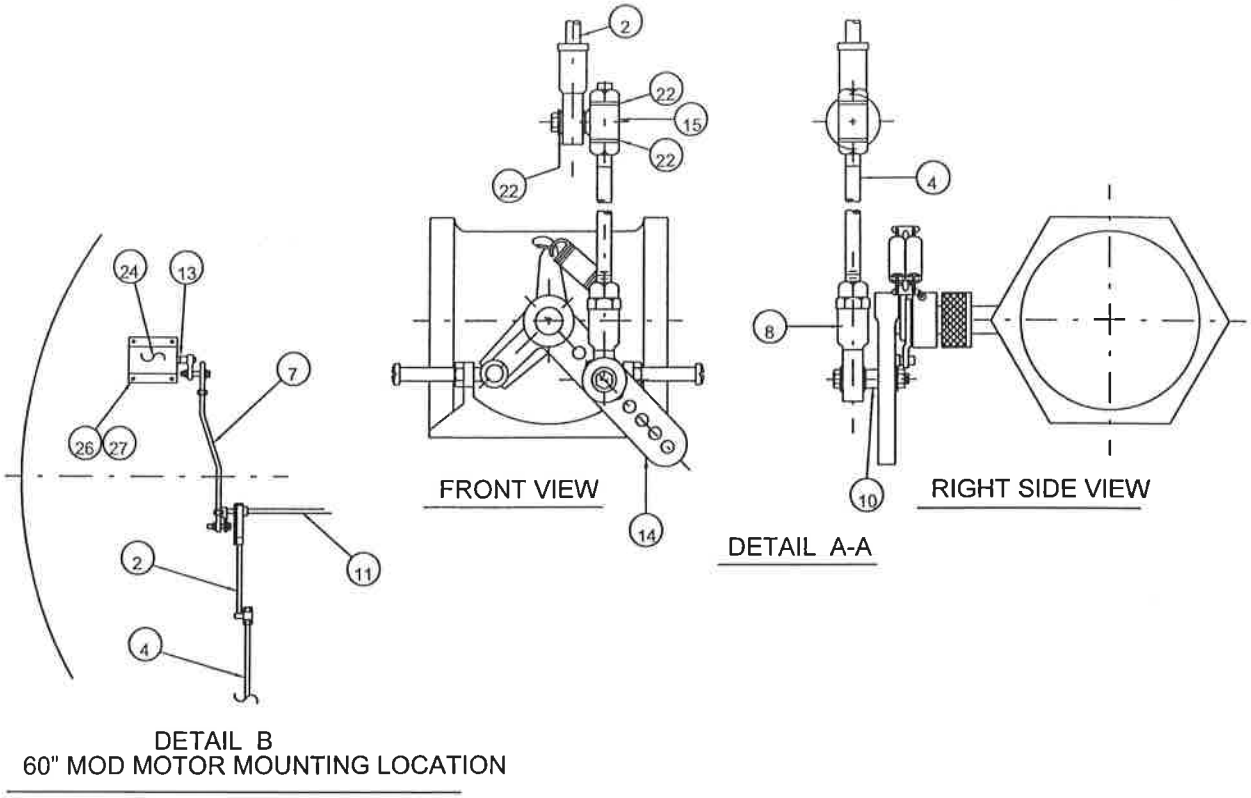

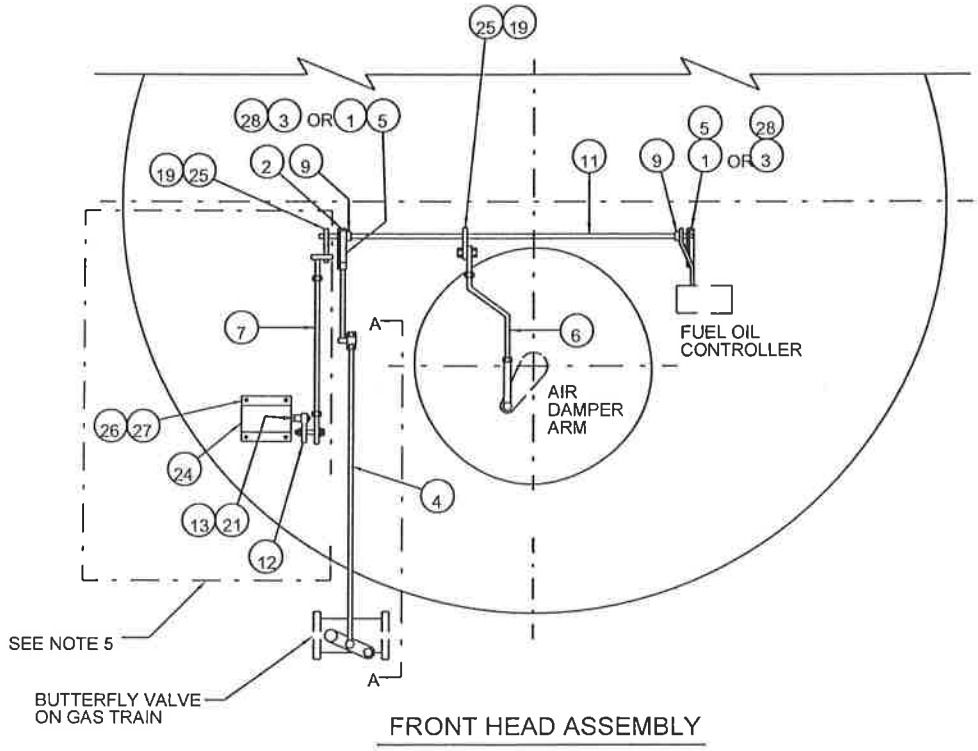

Front Head Linkage - Model CB

60" DIA. BOILER							
ITEM	QUANTITY			PART NO.	DESCRIPTION	WHERE USED	OPTION
	GAS	OIL	CMB				
1	1	1	2	313-A-5	CAM ASSEMBLY		BM,A4
2	1	-	1	295-99	GAS VALVE STEM ASSY.		A4
3	1	1	-	85-A-1926	SUPPORT - JACKSHAFT		BM,A4
4	1	-	1	67-A-17	ROD LINKAGE, GAS VALVE		A4,A8
5	1	1	2	853-454	GASKET		A4
6	1			476-00054	AIR DAMPER LINKAGE		A4
7	1			476-00053	MOTOR TO SHAFT LINKAGE		A4
8	1			883-17	BALL JOINT		BM,A4
9	2			824-21	COLLAR		BM,A4
10	1			10-288	BUSHING-BALL JOINT		BM,A4
11	1			74-A-211	JACKSHAFT		A4
12	-			NOT USED	-		--
13	1			10-A-91	BUSHING		BM,A4
14	1			287-A-24	GAS VALVE & ARM DAMPER		BM,A4
15	1			68-A-32	END ROD LINKAGE		BM,A4
16	-			--	----		--
17	--			--	----		--
18	--			--	----		--
19	4			860-101	SET SCREW 1/4-20 x 1/2"		--
20	--			--	----		--
21	--			--	----		--
22	3			952-93	LOCKWASHER 3/8"		--
23	-			NOT USED	-		--
24	1			506-479	MOD. MOTOR	NON-UL	D3
	1			506-479	MOD. MOTOR	NON-HAWK	D3
	1			894-3513	MOD. MOTOR	HAWK	C3
25	--			--	----		--
26	4			868-137	BOLT, HEX HD 1/4-20 X 1" LG.		--
27	4			952-92	LOCKWASHER 1/4"		--
28	2			77-371	CAM SPACERS	FUEL 200, 400, 700	BM,A4

NOTES:

1. WITH DAMPER AT FULLY CLOSED POSITION, SET JACKSHAFT DAMPER CONTROL ARM AND BURNER DAMPER CONTROL ARM AT ANGLES SHOWN. WHEN CONNECTING LINKAGE ASSEMBLY TO CONTROL ARMS, ADJUST AS NECESSARY TO ACHIEVE DESIRED EXCESS AIR LEVEL AT LOW FIRE.
2. FOR HIGH TURNDOWN BURNER, DELETE (1) OF ITEM #25 FROM BASIC BILL OF MATERIAL AND FURNISH ITEM #23 (96" ONLY).
   FOR 48" DIA. BOILER ONLY, REPLACE ITEM #25 WITH ITEM #31.
3. ITEM #3 & 28 USED ON GAS ONLY (FOR 78" AND 96").
   FOR 48" AND 60" DIA. BOILERS, ITEM #3 IS USED FOR ALL FUELS, AND ITEM #28 IS USED ON GAS OR OIL/GAS COMB. ONLY.
4. ITEM #3 & 28 USED ON OIL ONLY (FOR 78" AND 96").
   FOR 48" AND 60" DIA. BOILERS, ITEM #3 IS USED FOR ALL FUELS, AND ITEM #28 IS USED ON GAS OR OIL/GAS COMB. ONLY.
5. FOR 78" & 96" DIA. BOILERS, MOUNT MOD. MOTOR & JACKSHAFT LINKAGE ASSEMBLY AS SHOWN ON FRONT HEAD ASSEMBLY. FOR 48" AND 60" DIA. BOILERS, MOUNT ITEMS AS SHOWN ON DETAIL "B".
6. FOR 78" LE, ITEM 11 CALLED OUT ON 476-C-237 & 476-C-238.

Front Head Linkage -Model CB/CB-LE

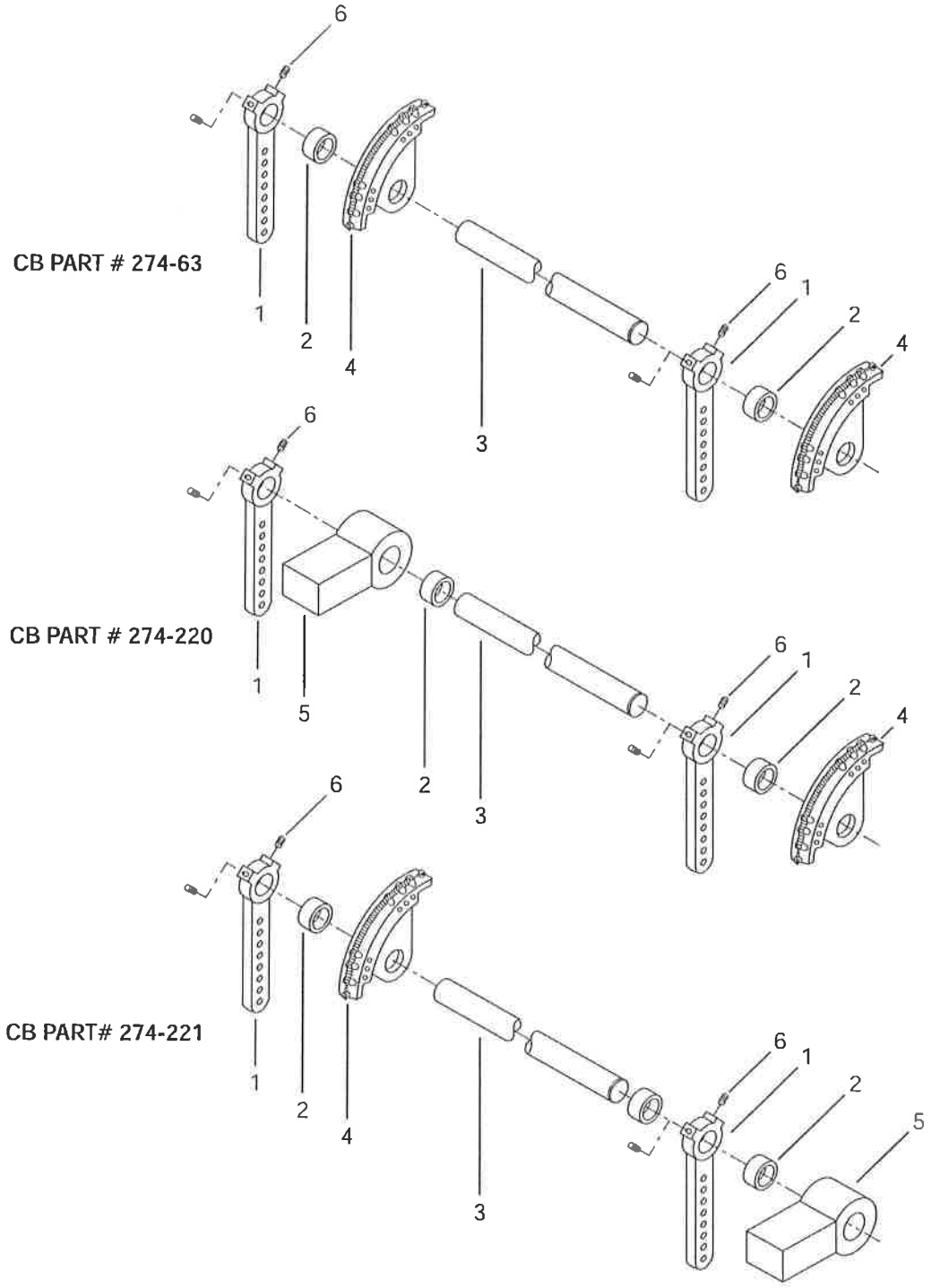

Jackshaft Retrofit Assembly Kits

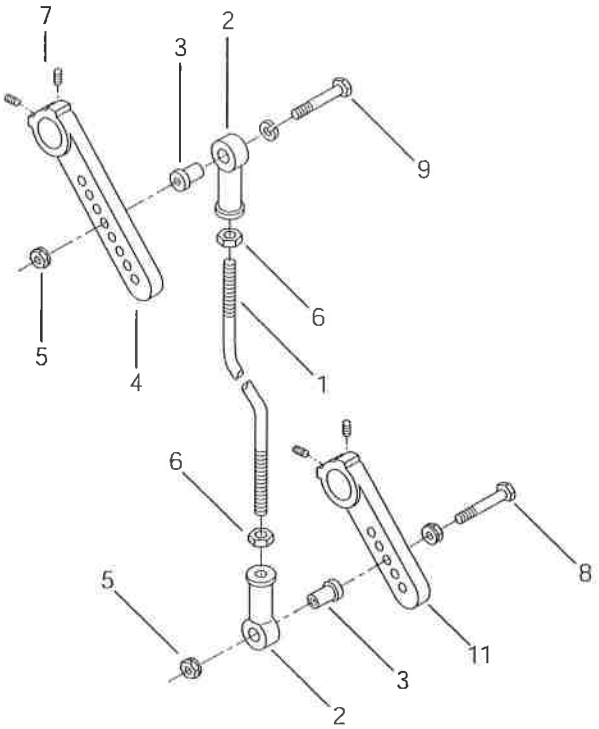

CB PART # 476-53

Item	REQ.	Part #	Description
1	1	67-16	Activation Rod
2	2	883-17	Ball Joint
3	2	10-288	Ball Joint Bushing
4	1	2-47	Modulation Motor Arm
5	2	869-21	Hex Nut, 1/4" - 20
6	2	869-22	Hex Nut, 3/8" - 24
7	2	860-39	Set Screw
8	1	868-138	Capscrew, 1/4" - 20, 1-1/4" LG
9	2	868-139	Capscrew, 1/4" - 20, 1-1/2" LG
10	Not Used		
11	1	2-96	Damper Motor Arm

Mod Motor Linkage Kits

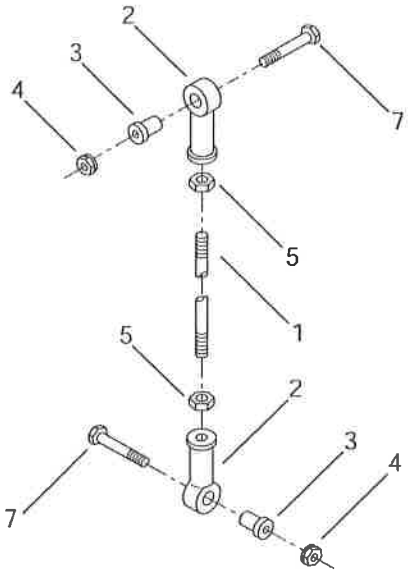

CB PART # 476-54

Item	REQ.	Part #	Description
1	1	67-109	Damper Linkage Rod
2	2	883-17	Ball Joint
3	2	10-288	Ball Joint Bushing
4	2	869-21	Hex Nut, 1/4" - 20
5	2	869-22	Hex Nut, 3/8" - 24
6	-		Not Used
7	2	860-39	Capscrew, 1/4" - 20, 1 1/2" LG

Air Damper Linkage Kit

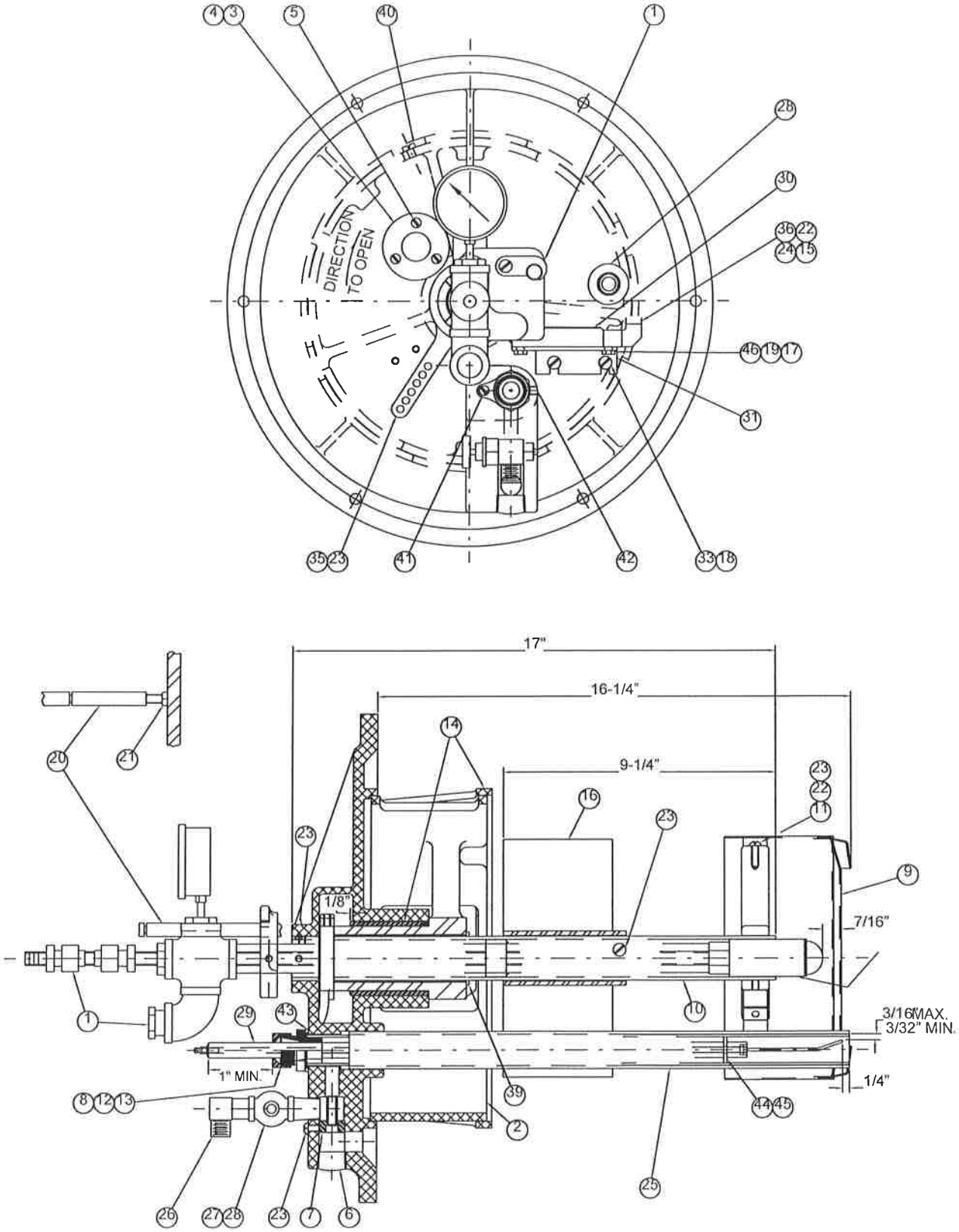

Burner Drawer-Gas Pilot Models 100-600, 125-200HP CB-LE

ITEM	QTY	PART NO.	DESCRIPTION
1	1	SEE TABLE	NOZZLE-GUN ASSEMBLY
2	1	108-B-47	DAMPER
3	2	851-77	MICA, SHEET, PORT HOLE, #36 GA. X 1-1/2" DIA.
4	1	65-A-11	RETAINER SIGHT HOLE
5	3	860-176	MACHINE SCREW, RD. HD. 10-24 X 1/4" LG.
6	1	858-310	PLUG, PIPE, COUNTER SUNK, 3/4"
7	1	48-A-98	VENTURI, GAS PILOT
8	1	904-36	GROMMET, RUBBER
9	1	SEE TABLE	DIFFUSER ASSEMBLY AIR
10	1	90-A-1512	TUBE, BURNER DRAWER
11	1	134-B-47	SPIDER
12	1	34-A-7	GLAND, PACKING
13	1	90-A-1708	TUBE & ADAPTER ASS'Y, GAS PILOT
14	1	59-5768	PLATE, BACK BEARING ASSEMBLY (SEE 59-A-918)
15	1	827-6	BULK CONDUIT, GREENFIELD 3/8" X 11" LG
16	1	22-A-122	DIFFUSER, AIR STABILIZER
17	2	860-91	MACHINE SCREW, RD. HD. #10-32 X 1-1/2" LG.
18	3	952-92	LOCKWASHER, 1/4"
19	2	869-9	NUT, HEX #10-32
20	1	56-A-21	PIN-LOCKING
21	1	869-36	NUT, HEX 5/16"-18
22	5	860-158	SETSCREW, SOCKET HD. 1/4"-20 X 5/16" LG
23	9	860-39	SETSCREW, SOCKET HD. 1/4"-20 X 3/8" LG
24	2	848-100	BUSHING FIBER
25	1	90-A-1709	TUBE GAS PILOT
26	1	845-194	ELBOW, MALE, 5/8" ODC X 1/2" NPT X 90°
27	1	825-30	COCK, GAS, TEE HEAD
28	2	857-153	NIPPLE, 1/2" X 1-1/2" LG
29	1	435-B-127	ELECTRODE, IGNITION ASS'Y
30	1	836-996	SWITCH, LIMIT
31	1	8-A-3057	BRACKET, LIMIT SWITCH
32	1	848-2	CONNECTOR, BOX, SQUEEZE TYPE
33	6	860-7	MACH, SCREW-RD. HD. 1/4"-20 X 1/2" LG
34	-	NOT USED	NOT USED
35	1	2-A-31	ARM, DAMPER
36	1	848-16	CONNECTOR, BOX, SQUEEZE TYPE
37	-	NOT USED	NOT USED
38	-	NOT USED	NOT USED
39	1	73-A-26	SEALER, RING
40	1	868-210	CAPSCREW, SOCKET HD. 1/4"-20 X 1/2" LG
41	1	860-201	MACHINE SCREW, 10-24 NC RD. H. X 1/8"
42	1	860-161	SET SCREW-SOCKET HD. 5/16"-18 NC X 1/2"
43	1	853-1	O-RING
44	1	134-A-53	HOLDER-ELECTRODE
45	1	860-244	SET SCREW-SOCKET HD. 6-32 X 1/8"
46	2	952-117	LOCKWASHER #10

Burner Gun Assembly

BOILER	P/N IT. 1
125 30 PPM	251-B-35
150 30 PPM	251-B-35
200 30 PPM	251-B-37
125 & 150 60 PPM	251-B-35
200 60 PPM	251-B-37

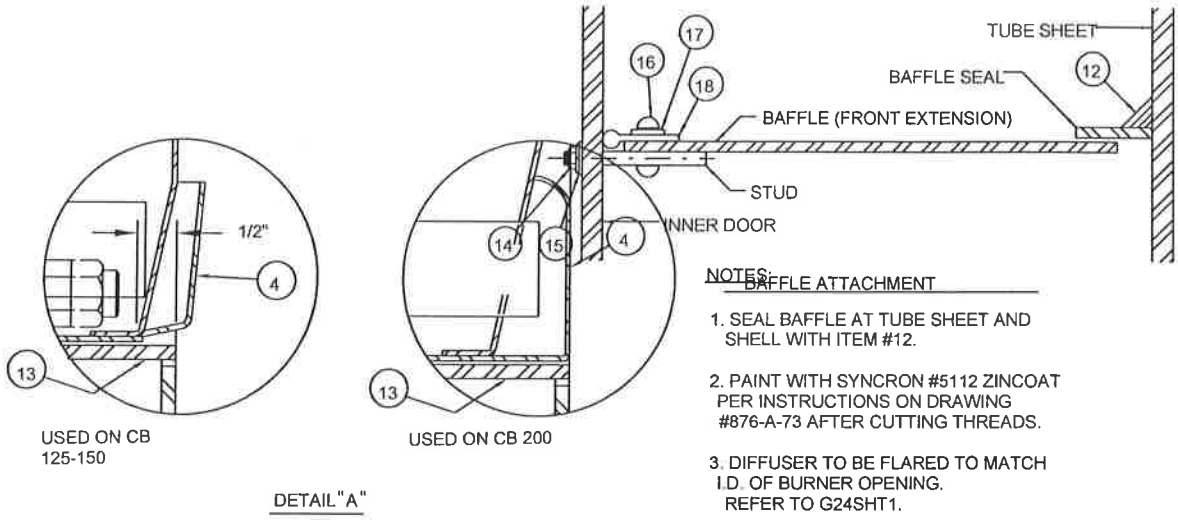

NOTES: BAFFLE ATTACHMENT

1. SEAL BAFFLE AT TUBE SHEET AND SHELL WITH ITEM #12.
2. PAINT WITH SYNCRON #5112 ZINCOAT PER INSTRUCTIONS ON DRAWING #876-A-73 AFTER CUTTING THREADS.
3. DIFFUSER TO BE FLARED TO MATCH I.D. OF BURNER OPENING. REFER TO G24SHT1.

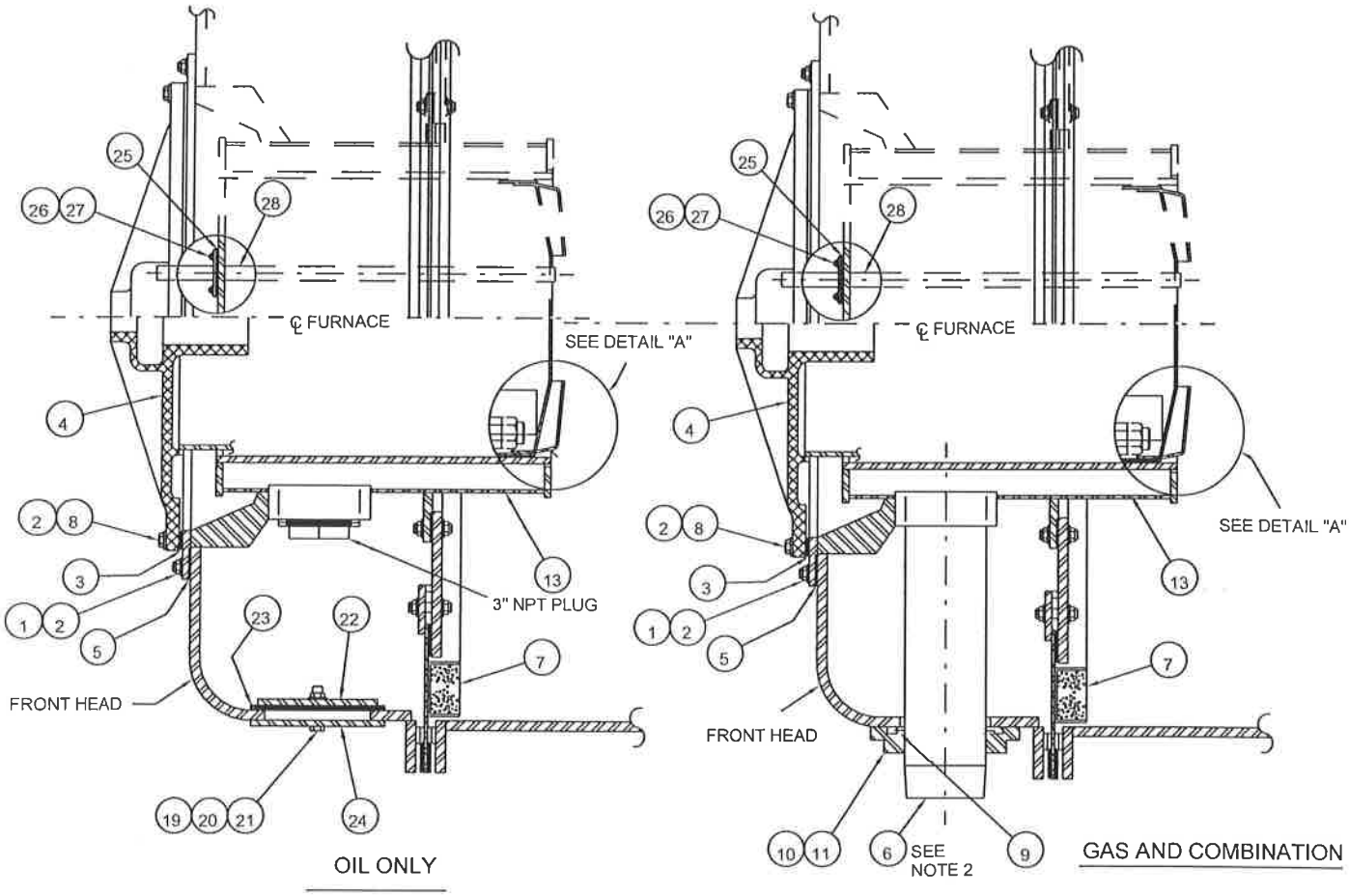

ITEM	QTY	PART NO.	DESCRIPTION	USED ON
1	8	869-30	NUT, HEX, 3/8"-16	-
2	14	952-93	WASHER, 3/8"	-
3	1	32-A-605	GASKET, BURNER DRAWER TO HOUSING	☆-
4	1	SEE TABLE	BURNER DRAWER	-
5	1	32-A-603	GASKET, BURNER HOUSING TO FRT. HEAD	-
6	1	900-79	BULK PIPE, 3" X 13-1/2" LG. TBE.	NAT. GAS/COMBINATION OR PROPANE
7	1	465-B-1330	DOOR, INNER R.H. SWING	CB125-200
	1	465-B-1331	DOOR, INNER L.H. SWING	CB125-200
8	6	868-157	CAPSCREW, HEX HD 3/8-16 X 1-1/4" LG	-
9	1	853-348	BULK PACKING, 1/4" DIA. X 10 "	☆NAT. GAS/COMBINATION OR PROPANE
10	1	65-A-704	RETAINER, MACHINING	☆NAT. GAS/COMBINATION OR PROPANE
11	3	860-15	SETSCREW, SOC HD 3/8-16 X 1/2" LG	NAT. GAS/COMBINATION OR PROPANE
12	6 OZ	872-558	THERMO SILICATE CEMENT	-
13	1	40-D-540	BURNER HOUSING, WELDMENT	*NAT. GAS/COMB.-ALL EXCEPT CBW200
	1	40-580	BURNER HOUSING, WELDMENT	*NAT. GAS/COMB.-CBW 200 ONLY
	1	40-D-581	BURNER HOUSING, WELDMENT	*PROPANE-CB125-150
	1	40-582	BURNER HOUSING, WELDMENT	*PROPANE-CB200 ONLY
14	4	869-29	NUT, HEX, 1/2" BRASS	-
15	8	952-325	WASHER, 1/2" FLAT BRASS	-
16	24	841-A-551	RIVET	-
17	8 FT	971-291	STRIP, PERFORATED	-
18	1	853-394	GASKET, 2" X 96"	-
19	1	869-30	NUT, HEX, 3/8"-16	OIL ONLY
20	1	952-93	LOCKWASHER, 3/8"	OIL ONLY
21	1	868-157	CAPSCREW HEX HD 3/8-16 X 1-1/4" LG	OIL ONLY
22	1	65-A-142	RETAINER, FRONT HEAD COVER	OIL ONLY
23	1	32-A-765	GASKET, FRONT HEAD COVER	OIL ONLY
24	1	19-A-156	COVER, FRONT HEAD PLATE	OIL ONLY
25	1	32-A-497	GASKET, MOUNTING PLATE SCANNER TUBE	-
26	4	952-92	LOCKWASHER, 1/4"	-
27	2	860-7	MACH. SCREW, 1/4-20 X 1/2" LG.	-
28	1	90-A-146	TUBE, SCANNER ASSEMBLY	-

	TABLE FOR ITEM 4 BURNER DRAWER (SEE NOTE 3)			
FUEL	100		200-600	700
H.P.	OIL PILOT	GAS PILOT	GAS PILOT	GAS PILOT
125-150	429-D-263	429-D-292	429-D-292	429-D-293
CB200	429-D-257	429-D-294	429-D-294	429-D-295

Burner Housing

CONTROL CABINET (HAWK)					
ITEM	QTY	PART NO.	DESCRIPTION	USED ON	OPTION
1	1	283-B-2978	CONTROL CABINET	-	C3
2	1	SEE TABLE 1	SWITCH BRACKET	-	C3
3	1	881-231	PILOT LIGHT	-	C3
4	1	881-232	LENS, RED	-	C3
5	1	118-644	NAMEPLATE, LOW WATER	-	C3
6	1	836-620	SWITCH, OPERATOR	-	C3
7	1	836-623	SWITCH CONTACT BLOCK	-	C3
8	1	118-1382	NAMEPLATE, BURNER OFF-ON	-	C3
9	1	836-746	FUEL SELECTOR SWITCH	FUEL 200,400	C3
10	1	118-196	NAMEPLATE,GAS-OIL	FUEL 200,400	C3
11	1	833-2415	HAWK CHASSIS	-	C3
12	1	833-2421	HAWK AMPLIFIER	-	C3
13	1	833-2418	HAWK PROGRAM MODULE	-	C3
14	1	833-2419	HAWK KEYBOARD/DISPLAY	-	C3
15	1	118-2462	LABEL,CB HAWK	-	C3
16	1	836-210	OIL HEATER SWITCH	FUEL 400,600	C3
17	1	118-204	NAMEPLATE,OIL HEATER	FUEL 400,600	C3

TABLE 1						
ITEM	FUEL SERIES					
	100	101	200	400	600	700
2	-	-	8-801	8-3228	8-801	-

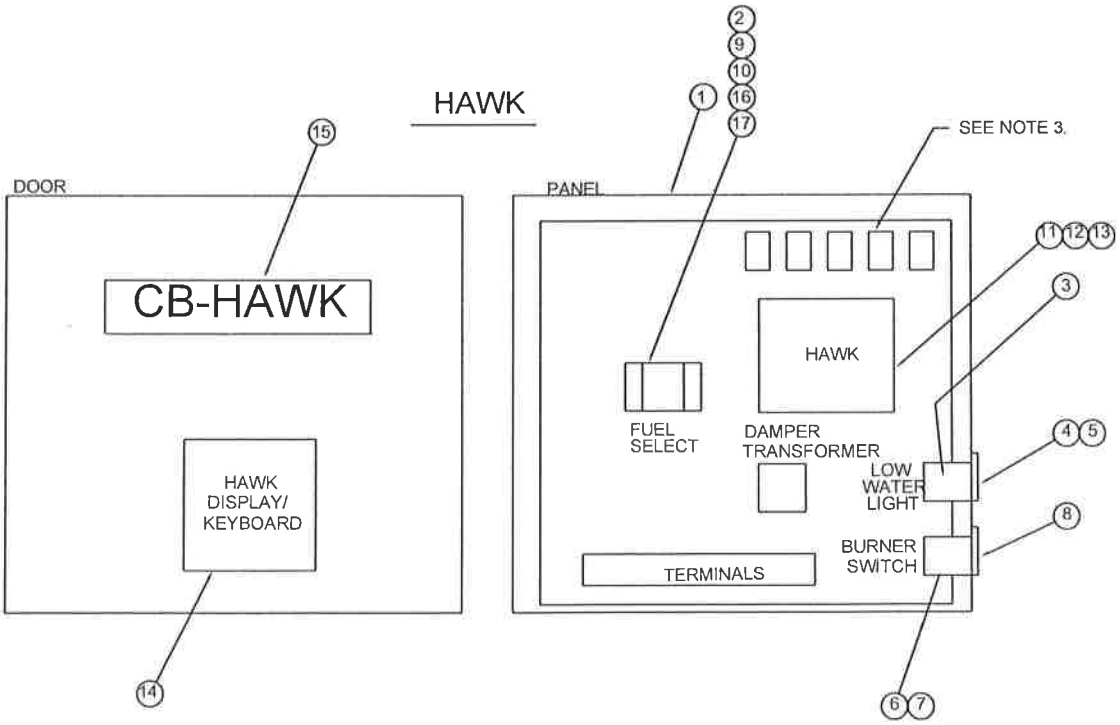

Control Cabinet

TABLE 1 - ITEM 8					
BM HP	VOLTAGE				
	200-208V	220-240V	346-416V	440-480V	575-600V
2	833-1884	833-1884	833-1884	833-1884	833-1884
3	833-1884	833-1884	833-1884	833-1884	833-1884
5	833-1885	833-1885	833-1884	833-1884	833-1884
7-1/2	833-1885	833-1885	833-1885	833-1885	833-1885
10	833-1886	833-1886	833-1885	833-1885	833-1885
15	833-1197	833-1886	833-1886	833-1886	833-1886
20	833-1197	833-1197	833-1886	833-1886	833-1886
30	NOTE 1	833-1197	833-1197	833-1197	833-1197
40	NOTE 1	NOTE 1	833-1197	833-1197	833-1197
50	NOTE 1	NOTE 1	833-1197	833-1197	833-1197
60	NOTE 1	NOTE 1	NOTE 1	NOTE 1	NOTE 1

NOTES: 1. STARTER IS IN OWN ENCL. MOUNTED ON THE FRONT HEAD.
2. OVERLOADS ARE TO BE SUPPLIED BASED ON MOTOR NAMEPLATE AMP. RATING.
3. FOR NON-HAWK PANEL, MAXIMUM QUANTITY OF RELAYS, TIMERS, OR COMBINATION OF BOTH IS 8. FOR HAWK PANEL THE MAXIMUM QUANTITY IS 5.

TABLE 2						
ITEM	FUEL SERIES					
	100	101	200	400	600	700
11	-	-	8-801	8-3228	8-801	-

TABLE 3							
FLAME SAFEGARD	ITEM	2 BASE	3 DISPLAY	4 CHASSIS	5 AMP. (IR)	6 MODULE	7 FD (IR)
CB780	(D4)	833-2725	833-2727	833-2718	833-2722	-	817-1742
CB100E	(D0)	833-2581	833-2714	833-2709	833-2584	833-2583	817-2261
E110	(D5)	833-2693	833-2713	833-2708	833-2384	833-2383	817-1933

CONTROL CABINET (NON-HAWK)					
ITEM	QTY	PART NO.	DESCRIPTION	USED ON	OPTION
1	1	119-405	CONTROL CABINET (W/SUB BASE)	-	D3
2	1	SEE TABLE 3	PROGRAMMER-BASE	-	SEE TABLE 3
3	1		PROGRAMMER-DISPLAY	-	
4	1		PROGRAMMER-CHASSIS	-	
5	1		PROGRAMMER-AMPLIFIER	-	
6	1		PROGRAMMER-MODULE	-	
7	1		PROGRAMMER-FLAME DETECTOR	-	
8	1	SEE TABLE 1	STARTER (SEE NOTE 2)	-	D3
9	1	836-746	SWITCH,GAS-OIL	FUEL 200,400	D3
10	1	118-196	NAMEPLATE,GAS-OIL	FUEL 200,400	D3
11	1	SEE TABLE 2	BRACKET	-	D3
12	1	836-210	SWITCH,OIL HEATER	FUEL 400,600	D3
13	1	833-2261	RELAY	FUEL 200,400	D3
14	1	833-2263	BASE	FUEL 200,400	D3
15	2	841-1483	SCREW, SELF-TAPPING	WITH ITEM 14,25	-
16	3	841-801	SCREW, SELF-TAPPING	WITH ITEM 8	-
17	4	841-89	NUT, SELF-LOCKING	-	-
18	2	881-225	LIGHT ASSEMBLY, RED LENS	-	D3
19	2	881-226	LIGHT ASSEMBLY, WHITE LENS	-	D3
20	1	836-210	SWITCH, BURNER	-	D3
21	1	836-211	SWITCH, MANUAL - AUTO	-	D3
22	1	836-209	SWITCH, MANUAL FLAME CONTROL	-	D3
23	1	118-1689	NAMEPLATE	-	D3
24	1	833-2261	RELAY (AIR PURGE)	FUEL 400,600	D3
25	1	833-2263	BASE (AIR PURGE)	FUEL 400,600	D3
26	1	118-204	NAMEPLATE-OIL HEATER	FUEL 400,600	D3
27	38	832-749	TERMINAL LUG	-	-
28	1	832-751	END BARRIER	-	-
29	2	832-752	RETAINING CLIP	-	-
30	1	832-750	CHANNEL	-	-
31	1	832-753	MARKING STRIP	-	-

NON-HAWK

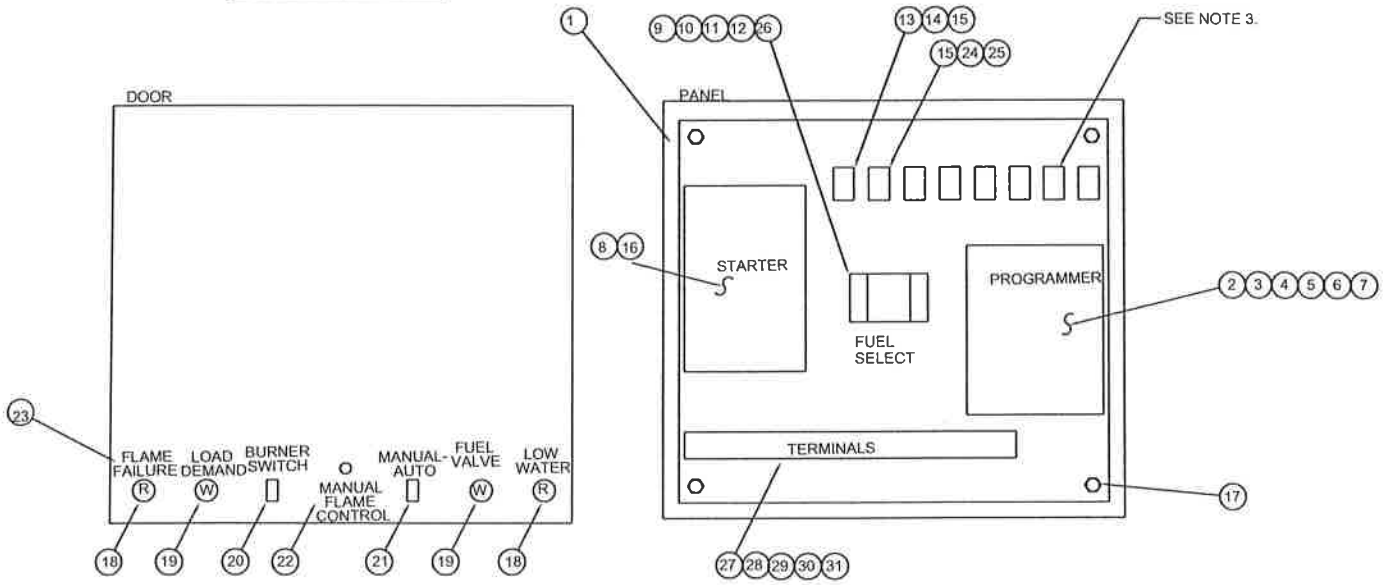

Control Panel CB,CBLE

BILL OF MATERIAL FOR ENT. BOX

ITEM	QTY	PART NO.	DESCRIPTION	USED ON	OPTION
1	1	434-61	TERMINAL STRIP, 25 TERMS		C8
2	1	118-1865	PLATE, I.D. FOR TERM. STRIP		C8
3	1	884-78	GROUND LUG		C8
4	1	848-223	FUSE BLOCK, CONTROL CIRCUIT		C8
5	1	118-297	NAMEPLATE, DECAL CONTROL CIRCUIT		C8
6	1	832-347	FUSE, FRN-15	-	C8
7	1	848-1083	ENT. BOX (18 X 15 X 6) (NEMA 1)	FUEL 700	C8
	1	848-338	ENT. BOX (24 X 18 X 6) (NEMA 1)	FUEL 100, 101, & 200	
	1	848-375	ENT. BOX (24 X 24 X 6) (NEMA 1)	FUEL 400 & 600 & "LE"	
8	1	SEE TABLE	MAIN POWER TERMINAL BLOCK	DETERMINED BY TOTAL AMP LOAD	C8
9	3	SEE TABLE	BLOWER MOTOR FUSE	-	C8
10	*	SEE TABLE	BLOWER MOTOR FUSE BLOCK	-	C8
11	3	SEE TABLE	AIR COMPRESSOR MOTOR FUSE	-	C8
12	*	SEE TABLE	AIR COMPRESSOR MOTOR FUSE BLOCK	-	C8
13	1	SEE TABLE	AIR COMPRESSOR MOTOR STARTER	-	C8
14	1	118-1667	AIR COMPRESSOR EMBLEM	W/ ITEMS 11, 12, & 13	C8
15	3	SEE TABLE	OIL HEATER FUSE	-	C8
16	*	SEE TABLE	OIL HEATER FUSE BLOCK	-	C8
17	1	833-2197	OIL HEATER CONTACTOR	W/ ITEMS 15 & 16	C8
18	1	118-299	OIL HEATER EMBLEM	W/ ITEMS 15, 16, & 17	C8
19	-	8-275	UNIVERSAL UPRIGHT	-	
20	1	8-3186	BRACKET, E-BOX		
21	1	8-3222	E-BOX CROSSBAR		
	1	8-3223	E-BOX CROSSBAR		
	1	8-3224	E-BOX CROSSBAR		

* = QTY 1 ON VOLTAGE 240, <
QTY 3 OTHERWISE

* = QTY 1 ON VOLTAGE 240, <
QTY 3 OTHERWISE

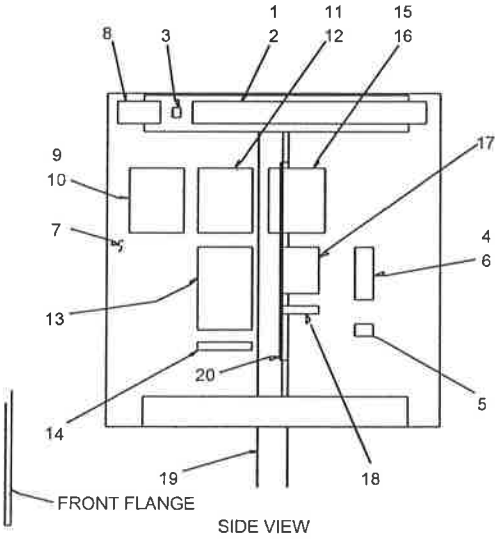

SIDE VIEW

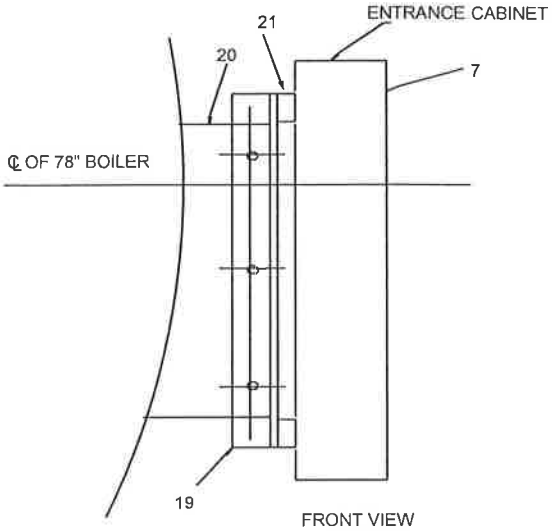

FRONT VIEW
FOR 78" BOILERS

Entrance Box - CB,CB-LE

BLOWER MOTOR FUSE SIZING

ELECTRICAL LOAD	SINGLE PHASE 50/60 HERTZ		THREE PHASE 50/60 HERTZ				
MOTOR HP	110-120 V	220-240 V	200-208 V	220-240 V	346-416 V	440-480 V	550-660 V
1/4	10	5-6/10	1-8/10	1-8/10		1	8/10
1/3	12	6-1/4	1-8/10	1-8/10		1	8/10
1/2	17-1/2	9	4-1/2	4	2	2	1-6/10
3/4	20	10	7	5-6/10	3-2/10	2-8/10	2-1/4
1	25	12	9	8	4-1/2	4	3-2/10
1-1/2	35	17-1/2	12	10	6-1/4	5-6/10	4-1/4
2	40	20	15	12	7	6-1/4	5
3	60	30	20	17-1/2	10	9	7
5		50	30	30	15	15	12
7-1/2		60	40	40	20	20	17-1/2
10		90	60	50	30	25	20
15			80	60	45	40	30
20			110	80	50	50	40
25			125	100	60	60	50
30			175	125	70	70	60
40			200	175	100	80	70
50			300	200	125	100	80
60			350	300	175	150	110
75			400	350	200	175	150
100			500	400	250	200	175
125			600	500	300	300	200
150				600		350	250

FUSE SIZES ARE CLASS RK5
DUAL ELEMENT, TIME DELAY.

	BUSSMAN	GOULD	LITTELFUSE
0-250 V	FRN	TR	FLN
251-600 V	FRS	TRS	FLS

TABLE ABOVE SHOWS VENDOR TYPES

PUMP, AIR COMP. & OIL HEATER FUSE SIZING

ELECTRICAL LOAD	SINGLE PHASE 50/60 HERTZ		THREE PHASE 50/60 HERTZ				
MOTOR HP	110-120 V	220-240 V	200-208 V	220-240 V	346-416 V	440-480 V	550-660 V
1/4	8	4-1/2	1-8/10	1-8/10		1	8/10
1/3	9	4-1/2	1-8/10	1-8/10		1	8/10
1/2	12	6-1/4	2-8/10	2-8/10	1-8/10	1-4/10	1
3/4	17-1/2	9	4-1/2	4-1/2	2-1/4	1-8/10	1-4/10
1	20	10	5	5	3-2/10	2-1/4	1-8/10
1-1/2	25	12	7	7	4	3-2/10	2-1/2
2	30	15	9	9	5-6/10	4-1/2	3-1/2
3	40	20	12	12	8	6-1/4	5
5		35	20	20	12	10	8
7-1/2		50	35	30	17-1/2	15	12
10		60	40	35	20	17-1/2	15
15			60	50	30	25	20
20			70	70	40	35	25
25			90	80	50	40	35
30			100	100	60	50	40
40			150	150	80	70	50
50			175	175	100	80	70
60			200	200	125	100	80
75			250	250	150	125	100
100			350	300		150	125
125			450	400		200	150
150			500	450		225	200

HEATER KW	110-120 V	220-240 V	200-208 V	220-240 V	346-416 V	440-480 V	550-660 V
2	20	12	7	7		4-1/2	3-2/10
3	30	15	10	10	6-1/4	5-6/10	4-1/2
5	50	25	15	15	10	8	6-1/4
7-1/2			25	25	15	12	10
10			30	30	25	17-1/2	12
15			45	45	35	25	20

FUSE SIZES ABOVE ARE CLASS RK5
DUAL ELEMENT, TIME DELAY.
TABLE AT RIGHT SHOWS VENDOR TYPES

	BUSSMAN	GOULD	LITTELFUSE
0-250 V	FRN	TR	FLN
251-600 V	FRS	TRS	FLS

CONTROL CIRCUIT XFMR VOLTAGE	1/2 KVA.	1 KVA.	1-1/2 KVA.	2 KVA.
200-208	4	8	12	15
220-240	3-1/2	7	10	12
346-416	2-8/10	4	6-1/4	8
440-480	2-1/2	3-1/2	5-6/10	7
550-600	2	3-1/2	4-1/2	5-6/10
SECONDARY FUSE	5-6/10	12	15	20

XFMR MOUNTED FUSES ARE CLASS CC TIME DELAY.
PANEL MOUNTED FUSES ARE CLASS RK5 DUAL ELEMENT,
TIME DELAY. FOR TYPE SEE CHART BELOW

	PANEL MOUNTED		XFMR MOUNTED
VENDOR	0-250 V	251-600 V	0-600 V
BUSSMAN	FRN	FRS	FNQR
GOULD	TR	TRS	ATQR
LITTELFUSE	FLN	FLS	KLDR

NOTES

1. FOR NON-HAWK, ITEMS 5, 13 THRU 21, & 23 ARE STOCKED AS
   506-478 FOR STD., FM, KEM, & IRM INSURANCE.
   506-479 FOR IRI, F & I. INSURANCE.
2. FOR NON-HAWK, ITEMS 22, 24 THRU 29, 33, & 34 ARE STOCKED AS 309-56.
3. ITEMS 5, 9, 23, 30, & 43 THRU 48 ARE STOCKED AS 320-58.

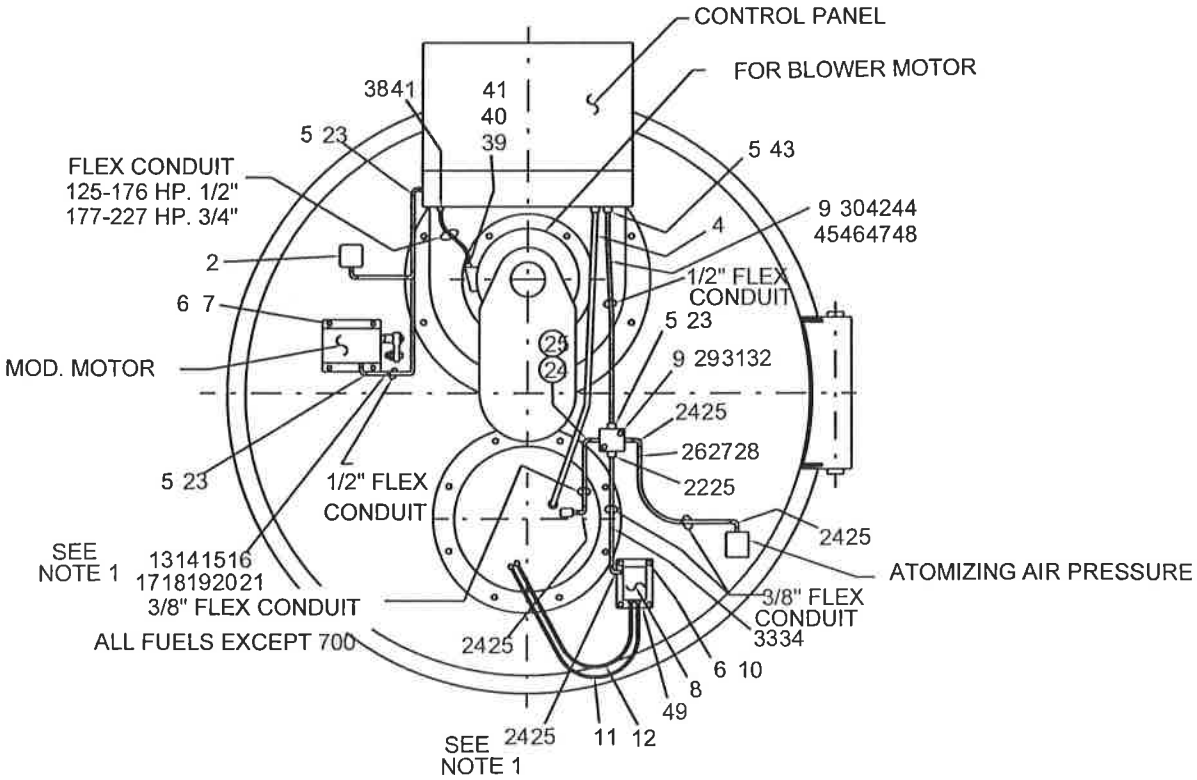

Front Head Electrical

ITEM	QTY	PART NO.	DESCRIPTION	USED ON
1	-	-	-	-
2	1	817-436	CAPS	-
3	-	-	-	-
4	1	817-1742	SCANNER	-
5	*4	848-101	BUSHING, ANTI-SHORT	-
6	*9	952-92	LOCKWASHER, 1/4"	-
7	4	868-137	CAPSCREW, HEX HD, 1/4-20 X 1" LG.	-
8	1	832-118	IGNITION TRANSFORMER	OIL ONLY 60 HZ
	1	832-107	IGNITION TRANSFORMER	GAS & COMB. 60 HZ
	1	832-286	IGNITION TRANSFORMER	ALL 50 HZ
9	1	950-238	WIRE, NO. 14 AWG, 600V MARKED #38 X 60" LG.	NON-HAWK
10	4	860-7	SCREW, MACHINE, 1/4-20 X 1/2" LG.	-
11	1	292-66	IGNITION WIRE	GAS & COMB.
	1	292-67	IGNITION WIRE	OIL ONLY
12	1	292-96	IGNITION WIRE	OIL ONLY
13	1	950-229	WIRE, NO. 14 AWG, 600V MARKED #29 X 60" LG.	IRI, F & I, NON-HAWK
14	1	950-202	WIRE, NO. 14 AWG, 600V MARKED #2 X 48" LG.	NON-HAWK
15	1	950-221	WIRE, NO. 14 AWG, 600V MARKED #21 X 55" LG.	-
16	1	950-222	WIRE, NO. 14 AWG, 600V MARKED #22 X 55" LG.	-
17	1	950-225	WIRE, NO. 14 AWG, 600V MARKED #25 X 57" LG.	-
18	1	950-226	WIRE, NO. 14 AWG, 600V MARKED #26 X 57" LG.	-
19	1	950-243	WIRE, NO. 14 AWG, 600V MARKED #43 X 65" LG.	-
20	1	884-90	TERMINAL, FORK TONGUE	-
21	3	848-289	WIRE NUT	-
22	1	848-81	CONNECTOR, DUPLEX, 3/8"	-
23	*3	848-10	CONNECTOR, SQUEEZE TYPE, 1/2" X 90°	-
24	*5	848-16	CONNECTOR, SQUEEZE TYPE, 3/8" X 90°	-
25	*6	848-100	BUSHING, FIBRE, 3/8"	-
26	1	950-230	WIRE, NO. 14 AWG, 600V MARKED #30 X 35" LG.	NON-HAWK
27	1	950-238	WIRE, NO. 14 AWG, 600V MARKED #38 X 35" LG.	NON-HAWK
28	2	884-90	TERMINAL, FORK TONGUE	-
29	1	848-273	BOX, OUTLET, 4" SQ. X 2-1/8" DEEP	-
30	1	950-206	WIRE, NO. 14 AWG, 600V MARKED #6 X 58" LG.	NON-HAWK
31	2	869-21	NUT, HEX, 1/4-20	-
32	1	848-248	OUTLET BOX COVER	-
33	1	950-204	WIRE, NO. 14 AWG, 600V MARKED #4 X 30" LG.	-
34	1	950-227	WIRE, NO. 14 AWG, 600V MARKED #27 X 30" LG.	-
35	-	-	-	-
36	-	-	-	-
37	-	-	-	-
38	1	848-31	CONNECTOR, SQUEEZE TYPE, 1/2" X 45°	125-150 HP.
	1	848-83	CONNECTOR, SQUEEZE TYPE, 3/4" X 45°	200 HP.
39	1	848-10	CONNECTOR, SQUEEZE TYPE, 1/2" X 90°	125-150 HP.
	1	848-85	CONNECTOR, SQUEEZE TYPE, 3/4" X 90°	200 HP.
40	1	848-151	REDUCING WASHER	125-150 HP.
	-	-	-	200 HP.
41	2	848-101	BUSHING, ANTI-SHORT	125-150 HP.
	2	848-307	BUSHING, ANTI-SHORT	200 HP.
42	1	950-230	WIRE, NO. 14 AWG, 600V MARKED #30 X 60" LG.	NON-HAWK
43	1	848-36	CONNECTOR, SQUEEZE TYPE, STRAIGHT, 1/2"	-
44	1	950-213	WIRE, NO. 14 AWG, 600V MARKED #13 X 56" LG.	NON-HAWK
45	1	950-204	WIRE, NO. 14 AWG, 600V MARKED #4 X 60" LG.	NON-HAWK
46	1	950-210	WIRE, NO. 14 AWG, 600V MARKED #10 X 56" LG.	NON-HAWK
47	1	950-228	WIRE, NO. 14 AWG, 600V MARKED #28 X 52" LG.	NON-HAWK
48	1	950-227	WIRE, NO. 14 AWG, 600V MARKED #27 X 60" LG.	NON-HAWK
49	1	8-A-3192	IGNITION TRANSFORMER MOUNTING BRACKET	-

Front Head Electrical

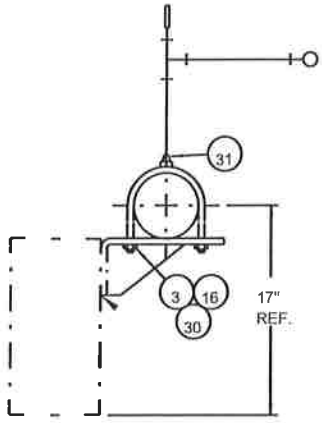

VIEW "A-A"

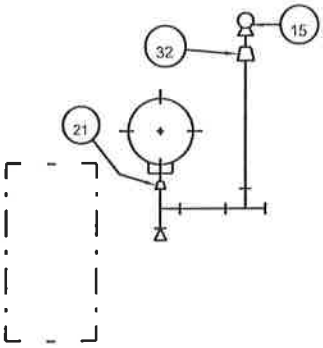

VIEW "B-B"

NOTES:

1. ALL DIMENSIONS ARE APPROX.
2. UNLESS OTHERWISE NOTED, ALL PIPE TO BE 3/4" SCH. 40 ASTM A120 WELDED BLACK STL. AND ALL FITTINGS 150# M.I.
3. USE ITEM 27 WITH 836-72 HOTS.
4. USE ITEM 27 WITH 836-65 LOTS.
5. SUPPLY TEES ONLY IF REQUIRED BY INSURANCE.
6. FOR HAWK DO NOT USE ITEM 10. USE QTY 2 OF ITEM 3.
7. ITEMS 22, 23, 24, & 25 USED FOR NON-HAWK ONLY. FOR HAWK USE SOLID STATE SENSOR. REFER TO DWG. 146-D-56.
8. WELD ITEM 4 TO SADDLE SUPPORT.

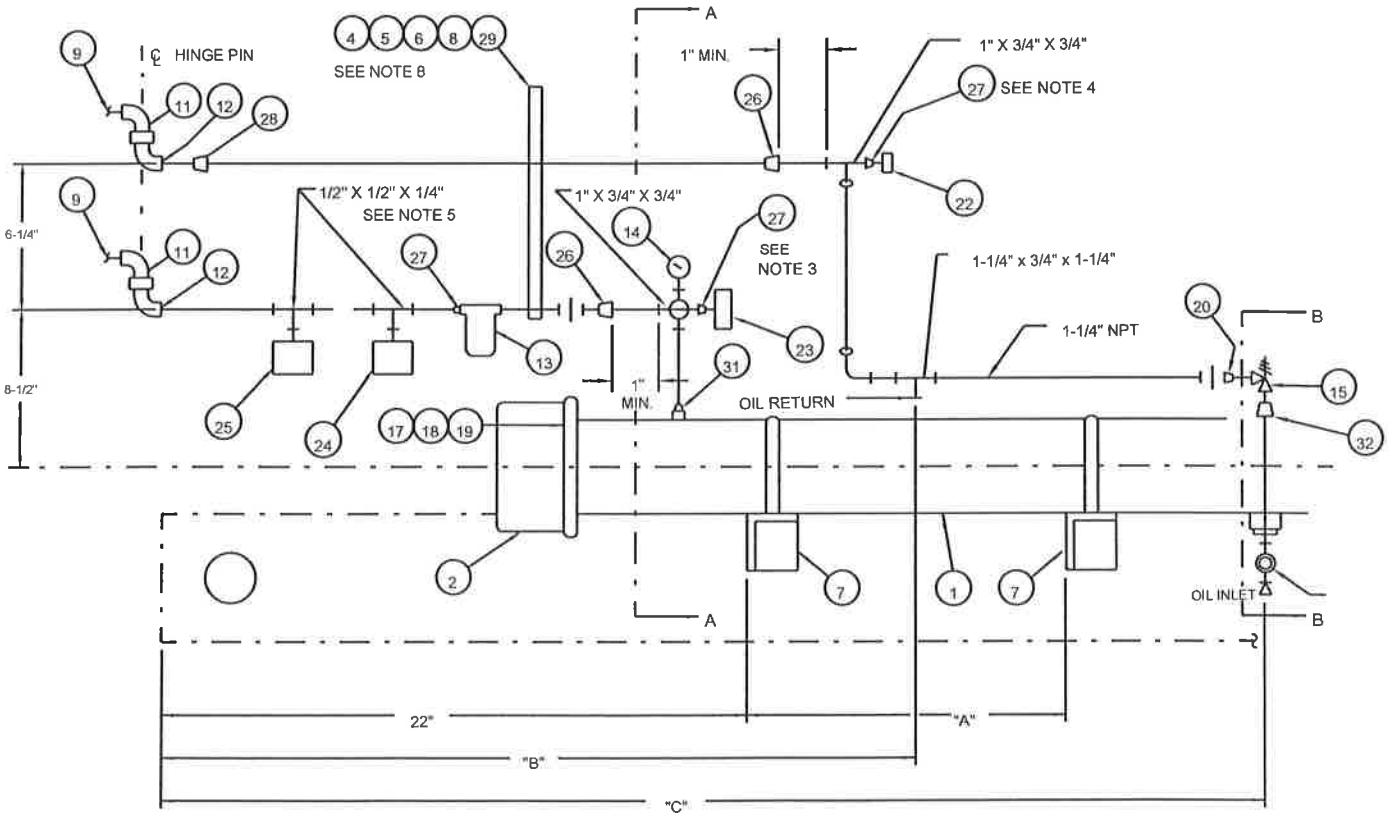

Straight Electric Oil Heater 60" Heavy Oil - Model CB,CB-LE

ITEM	QTY	PART NO.	DESCRIPTION	USED ON	OPTION
1	1	838-C-81	TANK - HEATER	3 & 5 kw U.S.	QQ QU
	1	838-C-35	TANK - HEATER	3 & 5 kw CAN.	
	1	195-B-238	TANK - HEATER	7-1/2 kw	
2	1	*	ELEMENT - HEATER	-	QQ/QU
3	2	7-A-52	U-BOLT	-	QQ/QU
4	1	8-A-65	BRACKET, PIPE	-	QQ/QU
5	2	928-45	STRAP - PIPE 3/4"	-	
6	2	868-405	CAPSCREW - HEX. HD. 1/4-20 x 7/8"	-	
7	2	8-A-656	HEATER BRACKET	-	QQ/QU
8	2	869-21	NUT HEX. 1/4-20	-	
9	1	507-B-500	TUBING - OIL RETURN (SEE NOTE 6)	-	QQ/QU
10	1	507-B-501	TUBING - OIL RETURN (SEE NOTE 6)	-	D3
11	2	845-313	ELBOW FLARED - 90°	-	
12	2	847-1715	SWIVEL JOINT - 90°	-	QQ/QU
13	1	843-252	STRAINER - 3/4" N.P.T.	-	QQ/QU
14	1	850-61	PRESSURE GAUGE	-	QQ/QU
15	1	940-2116	RELIEF VALVE - 1/2" N.P.T.	-	QQ/QU
16	4	952-93	LOCKWASHER - 3/8"	-	
17	1	853-227	GASKET - HEATER	-	
18	8	952-92	LOCKWASHER - 1/4"	-	
19	8	868-138	CAPSCREW HEX. HD. 1/4-20 x 1-1/4"	-	
20	1	847-430	BUSHING - 1-1/4" x 1/2"	-	
21	1	847-431	BUSHING - 1-1/4" x 3/4"	5 kw ONLY	
22	1	*	LOTS	ALL	D3
23	1	*	HOTS		D3
24	1	*	LOPS		D3
25	1	*	HOPS		D3
26	1	847-533	COUPLING 1" X 3/4"	-	
27	3	847-152	BUSHING 3/4" X 1/2"	-	
28	1	847-530	COUPLING - RED. - 3/4" X 1/2"	-	
29	2	952-92	LOCKWASHER - 1/4"	-	
30	4	869-30	NUT, HEX, 3/8"-16	-	
31	1	847-426	BUSHING, RED. 1" X 3/4"	5 kw-CAN. ONLY	
32	1	847-638	COUPLING - RED. 1-1/4" X 1/2"	-	

* = SEE TABLE ON PAGE 32

		DIM. "A"	DIM. "B"	DIM. "C"	DIM. "D"
125-150 H.P.	U.S.	9-1/2"	32-1/4"	37-1/4"	17-3/8"
	CANADA	9-1/2"	30"	35"	14-1/2"
200 H.P.	-	18"	41-1/4"	47-3/4"	27-3/4"

Straight Electric Oil Heater 60" Heavy Oil - Model CB,CB-LE

NOTES:

1. UNLESS OTHERWISE NOTED, ALL OIL PIPE TO BE SCH. 40 ASTM A120 WELDED BLACK STL. AND ALL FITTINGS TO BE 150# M.I.
2. SWIVEL JOINTS SHOULD BE LINED UP EVEN WITH FLANGE RING.
3. ALL DIMENSIONS ARE APPROX.
4. FOR F & I INSURANCE, SUPPLY ITEM 38. FOR IRI & KEMPER SUPPLY ITEMS 38 & 24.
5. ITEMS 37, 38, 39, & 40 ARE USED FOR NON-HAWK ONLY. FOR HAWK USE SOLID STATE SENSOR (REFER TO DWG. 146-D-263).
6. FOR F & I OR FM SUPPLY ITEM 37. FOR NO INSURANCE, IRI,OR KEMPER SUPPLY ITEMS 37 & 24.
7. ITEM 24 IS NOT REQUIRED ON CB175S & CB200 @ 15# ST. USE 3/4" PIPING.

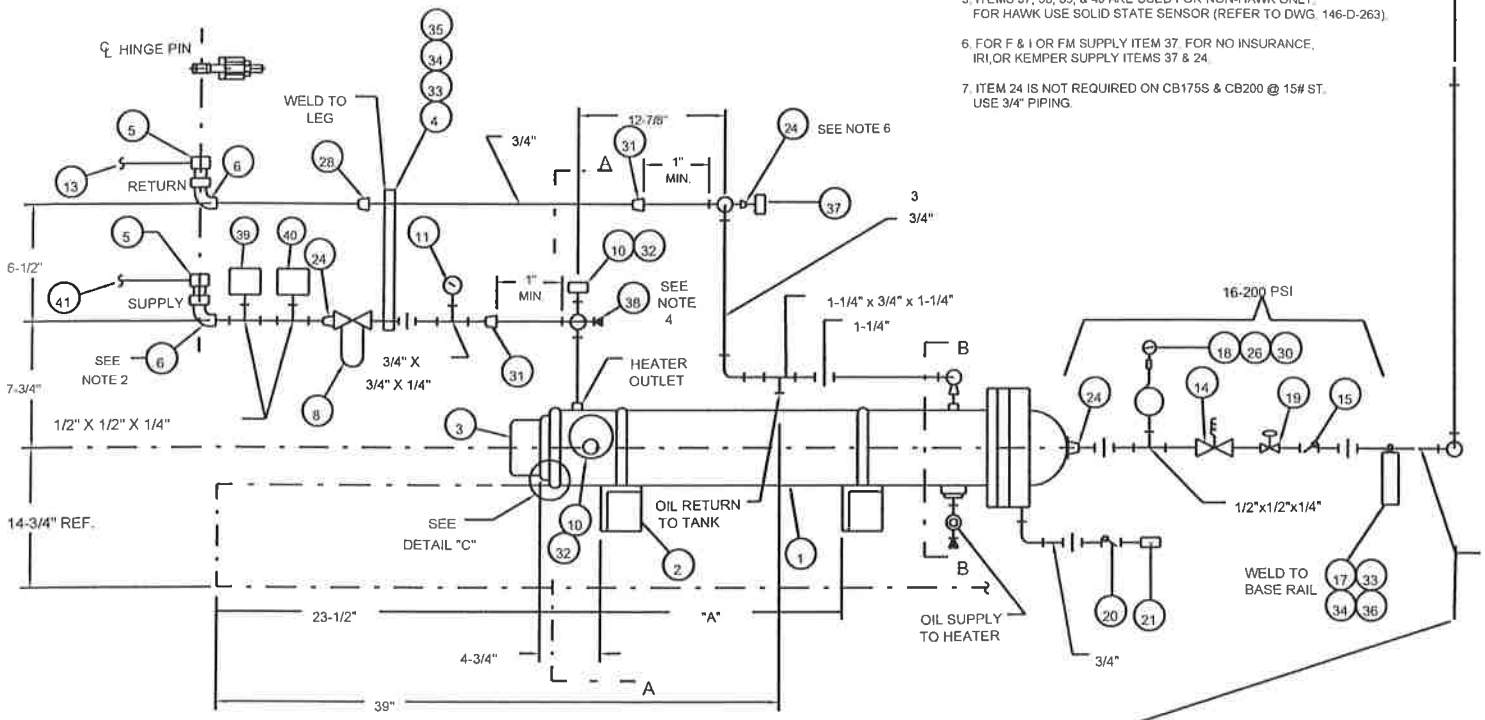

SIDE VIEW

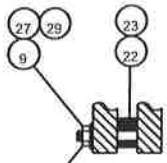

TIGHTEN NUTS ONLY ENOUGH SO THAT CONTACT IS MADE BETWEEN ELEMENT FLANGE AND FLAT GASKET.

DETAIL "C"

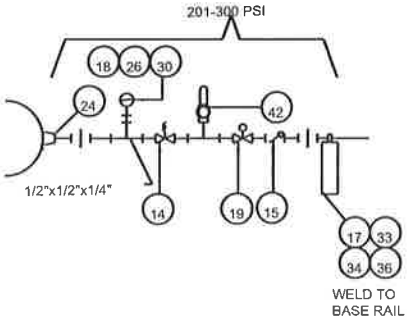

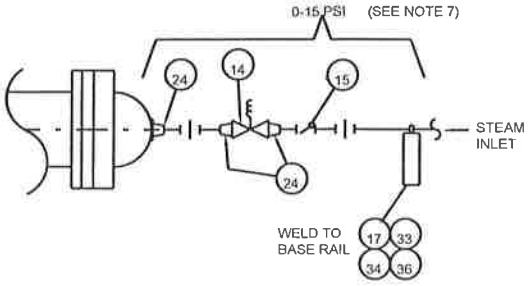

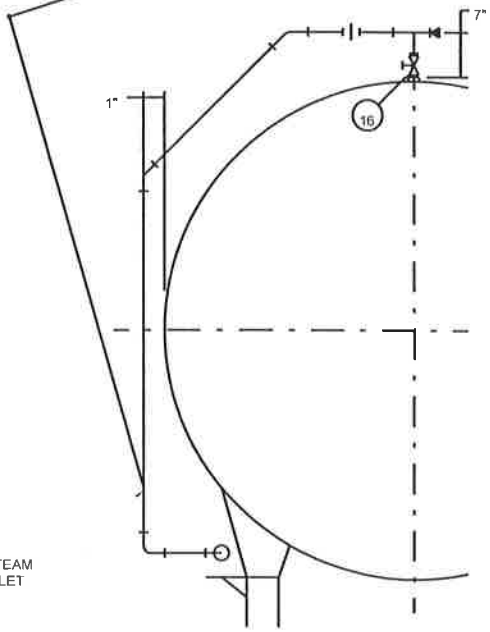

REAR VIEW

ITEM	QTY	PART NO.	DESCRIPTION	USED ON	OPTION
1	1	652-B-9	HEATER TANK	125-150 H.P.	B2
	1	652-B-10	HEATER TANK	200 H.P.	
2	2	8-A-650	BRACKETS	-	B2
3	1	.	OIL HEATER	✡ -	B2
4	1	8-A-65	BRACKET-OIL LINE	-	B2
5	2	845-313	ELBOW 1/2" ODC. X 1/2" NPT.	-	
6	2	847-1715	BARCO JOINTS	-	B2
7	1	940-2116	RELIEF VALVE	-	B2
8	1	843-252	STRAINER 3/4"	-	B2
9	8	869-21	NUT, HEX, 1/4"-20	-	
10	2	836-A-320	THERMOSTAT (OHT & SHT)	✡ -	B2
11	1	850-61	PRESSURE GAUGE	✡ -	B2
12	1	157-A-66	NIPPLE - ORIFICE	-	B2
13	1	507-B-500	TUBING, OIL RETURN	✡ -	B2
14	1	948-227	SOLENOID VALVE 3/4"	15#	B2
	1	948-273	SOLENOID VALVE 1/2"	16-125#	
	1	948-338	SOLENOID VALVE 1/2"	126-300#	
15	1	940-142	CHECK VALVE 3/4"	15# (200)	B2
	1	940-135	CHECK VALVE 1/2"	15# (125, 150,)	
	1	940-135	CHECK VALVE 1/2"	150-200#	
	1	940-458	CHECK VALVE 1/2"	250-300#	
16	1	941-142	GLOBE VALVE 3/4"	15# (200)	B2
	1	941-40	GLOBE VALVE 1/2"	15# (125, 150)	
	1	941-40	GLOBE VALVE 1/2"	150-200#	
	1	941-322	GLOBE VALVE 1/2"	250-300#	
17	1	8-A-661	BRACKET	-	B2
18	1	850-3	STEAM GAUGE	✡ 150-300#	B2
19	1	817-260	REGULATOR, STEAM 1/2"	150#	B2
	1	918-713	REGULATOR, STEAM 1/2"	250#	
	1	918-12	REGULATOR, STEAM 1/2"	300#	
20	1	940-142	CHECK VALVE 3/4"	-	B2
21	1	934-256	STEAM TRAP	-	B2
22	1	32-A-2394	GASKET	-	B2
23	1	853-692	GASKET O-RING	-	B2
24	6	847-152	BUSHING, HEX 3/4" X 1/2"	-	
	4	847-152	BUSHING, HEX 3/4" X 1/2"	150-300#	
25	2	841-1142	U-BOLT	-	
26	1	854-11	SIPHON	✡ 150-300#	B2
27	8	952-92	LOCKWASHER 1/4"	-	
28	1	847-530	REDUCING COUPLING 3/4" X 1/2"	-	
29	8	841-1458	STUD	-	
30	1	858-311	FULL COUPLING 1/4" NPT.	150-300#	
31	1	847-533	COUPLING, RED, 1" X 3/4"	-	
32	2	832-311	CAPACITOR	✡ -	B2
33	3	868-405	CAPSCREW HEX HD. 1/4"-20 X 7/8" LG.	-	
34	3	869-234	NUT & LOCKWASHER COMBINATION 1/4"	-	
35	2	928-45	CLAMP 3/4"	-	
36	1	928-44	CLAMP 1/2"	15# (125, 150)	
	1	928-44	CLAMP 1/2"	150-300#	
	1	928-45	CLAMP 3/4"	15# (200)	
37	1	.	LOTS	✡ ALL	D3
38	1	.	HOTS	✡	D3
39	1	.	LOPS	✡	D3
40	1	.	HOPS	✡	D3
41	1	507-B-501	TUBING, OIL SUPPLY	✡ NON-HAWK	
	1	507-B-6812	TUBING, OIL SUPPLY	✡ HAWK ONLY	
42	1	940-2974	RELIEF VALVE, 1/2"	201-300#	B2

HORSEPOWER	DIMENSION "A"
125 & 150	21"
200	37"

* = SEE TABLES ON PAGE 32

Heavy Oil Piping 60"Steam - Model CB, CB-LE

OIL HEATER RATINGS (KW)				
HORSEPOWER	#4 OIL	#5 & #6 OIL		
	ALL PRESSURE	STEAM		HOT WATER
		15	16-300	ALL
50-200	3	5	5	5
250	5	7-1/2	7-1/2	7-1/2
300-350	7-1/2	7-1/2	7-1/2	7-1/2
400	10	7-1/2	7-1/2	10
500	10	10	7-1/2	10
600-800	15	10	7-1/2	10

NOTE: #4 OIL AND HOT WATER #5 & #6 OIL USE STRAIGHT ELECTRIC OIL HEATER

SHIPPED LOOSE (NOT SHOWN) (ALL BOILERS)				
QTY	PART NO.	DESCRIPTION	USED ON	OPTION
1	SEE TABLE	OIL PUMP	B -	B7
1	833-1902	STARTER	B -	B7
1	923-47	STRAINER	B -	B7

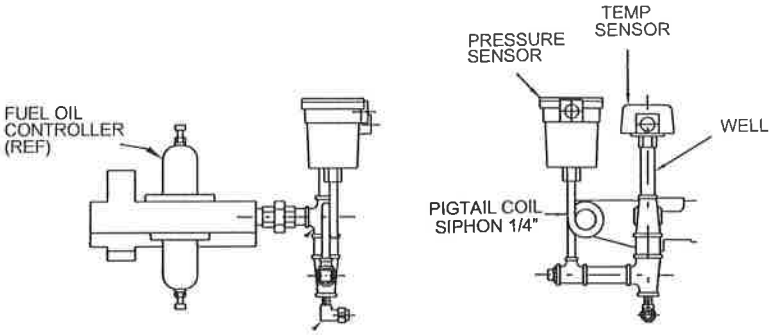

HAWK ONLY

STEAM-ELECTRIC OIL HEATER				
RATING	200/230 VOLT	380 VOLT	460 VOLT	600 VOLT
5 KW	832-288	832-1576	832-289	832-290
7-1/2 KW	832-509	832-1577	832-510	832-520
10 KW	832-981	832-1578	832-982	832-983

STRAIGHT ELECTRIC OIL HEATER					
RATING	200 VOLT	230 VOLT	380 VOLT	460 VOLT	600 VOLT
5 KW	832-948	832-929	832-932	832-933	832-934
7-1/2 KW	832-936	832-937	832-949	832-938	832-939
10 KW	832-940	832-941	832-950	832-942	832-943
15 KW	832-944	832-945	832-951	832-946	832-947

OIL PUMP (SHIP LOOSE)							
MODEL	VOLTAGE						
HP	200		230		380	460	600
	50 HZ.	60 HZ.	50 HZ.	60 HZ.	50 HZ.	60 HZ.	60 HZ.
50-100A	-	905-1057	905-1071	905-1050	905-1071	905-1050	-
125,125A-200	905-1072	905-1058	905-1072	905-1051	905-1072	905-1051	-
250-300	905-1072	905-1058	905-1072	905-1051	905-1072	905-1051	905-1065
350-800	-	905-1174	905-1180	905-1171	905-1180	905-1171	905-1177

OIL CONTROLS		LOTS		HOTS	LOPS	HOPS
		#4 OIL	#5,#6 OIL	ALL	ALL	ALL
NON-HAWK	NO INS.	817-926	836-65	836-72	817-1264	-
	IRI/FM/F & I	817-1958	817-1425	817-1425	817-1264	-
	KEMPER	817-926	836-65	836-72	817-1264	817-922
HAWK	ALL	817-2100 (TEMP SENSOR) 817-399 (WELL)			* 817-2098 (PRESS SENSOR) 854-11 (SIPHON COIL)	

* NOT REQUIRED BELOW 70HP

Common Oil Parts Heavy Oil

ITEM	QTY	PART NO.	DESCRIPTION	USED ON
1	1	530-B-94	SUPPORT PANEL & AIR HOOD ASSEMBLY	-
	1	530-B-384	SUPPORT PANEL & AIR HOOD ASSEMBLY	200 @ 50 HZ
2	1	333-A-17	STRAINER ASSEMBLY	-
3	1	923-79	AIR CLEANER	-
4	1	538-A-136	AIR - OIL TANK ASSEMBLY	-
	1	538-A-134	AIR - OIL TANK ASSEMBLY	200
5	1	8-C-2324	AIR COMPRESSOR BRACKET (NOTE 2)	-
	1	8-C-2326	AIR COMPRESSOR BRACKET (NOTE 2)	200
6	1	450-B-13	BELT GUARD ASSEMBLY	-
7	1	505-A-103	AIR PUMP ASSEMBLY	125, 150
	1	505-A-104	AIR PUMP ASSEMBLY	200
8	1	921-596	SHEAVE 3.0 PD	125, 150
	1	921-593	SHEAVE 3.2 PD	125, 150
	1	921-594	SHEAVE 3.6 PD	200
9	1	921-412	SHEAVE 6.7 PD	ALL @ 50 HZ
	1	921-314	SHEAVE 9.0 PD	ALL @ 60 HZ
10	1	809-6	V-BELT A38	ALL
	1	809-144	V-BELT A42	ALL
11	1	507-A-543	TUBING, AIRLINE TO BULKHEAD FITTING	-
12	1	507-A-544	TUBING, AIR-OIL TANK TO COMPRESSOR	125, 150
	1	507-B-686	TUBING, AIR-OIL TANK TO COMPRESSOR	200
13	1	507-B-488	TUBING, FINNED OIL COOLING LINE	-
14	8	869-30	NUT, HEX., 3/8-16	-
15	1	507-A-2601	TUBING, STRAINER TO COMPRESSOR	125
	1	507-A-2644	TUBING, STRAINER TO COMPRESSOR	150
	1	507-A-2645	TUBING, STRAINER TO COMPRESSOR	200
16	1	77-A-32	SPACER, FINNED TUBING (2 HOLES)	-
17	2	77-A-31	SPACER, FINNED TUBING (1 HOLE)	-
18	3	860-229	SCREW, MACH, FLAT HD, 1/4"-20 X 3/8" LG.	-
19	2	868-159	CAPSCREW, HEX HD, 3/8"-16 X 1-3/4" LG.	-
20	36	952-93	LOCKWASHER, 3/8"	-
21	2	952-94	LOCKWASHER, 1/2"	-
22	35	869-30	NUT, HEX, 3/8"-16	-

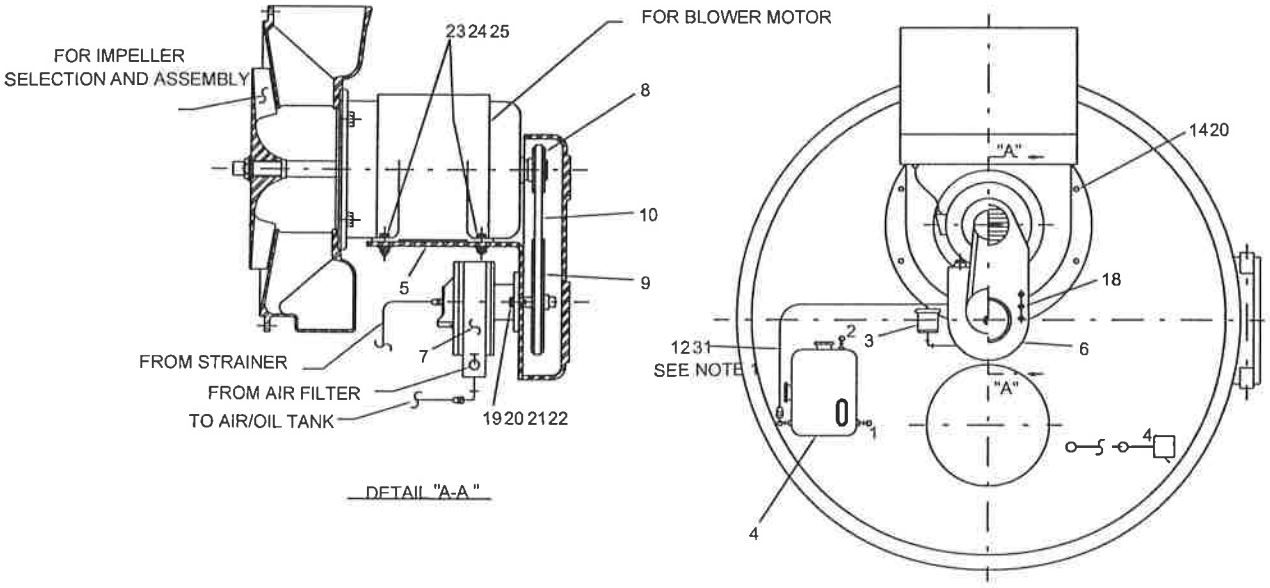

Belt Driven Air Compressor

ITEM	QTY	PART NO.	DESCRIPTION	USED ON
23	4	868-159	CAPSCREW, HEX HD, 3/8"-16 X 1-3/4" LG.	-
	4	868-176	CAPSCREW, HEX HD, 1/2"-13 X 2" LG.	200
24	4	952-93	LOCKWASHER, 3/8"	-
	4	952-94	LOCKWASHER, 1/2"	200
25	4	869-15	NUT, HEX, 1/2"-13	-
26	3	77-28	SPACER	-
27	8	841-566	SCREW, SHEET METAL, #10 X 5/8" LG.	-
28	1	858-271	COUPLING, FULL, 1/2" NPT	-
29	1	845-194	ELBOW, MALE, 5/8" ODC X 1/2" NPT	-
30	4	845-44	CONNECTOR, MALE, 5/8" ODC X 1/2" NPT	-
31	1	845-45	NUT, FLARED, 5/8" ODC X 45°	125, 150
	1	845-107	NUT, FLARED, 3/4" ODC X 45°	-
32	2	845-46	CONNECTOR, 3/8" ODC X 3/8" NPT	-
33	20	952-92	LOCKWASHER, 1/4"	-
34	4	928-45	CLAMP, PIPE, 3/4"	-
35	4	868-405	CAPSCREW, HEX HD, 1/4"-20 X 7/8" LG.	-
36	1	847-545	ELBOW, RED., 1/2" X 3/8"	-
37	2	952-108	WASHER, FLAT, 1/2"	-
38	4	869-140	LOCKNUT, HEX, 1/2"	-
39	4	860-7	MACHINE SCREW 1/4"-20 X 1/2" LG.	-
40	1	859-80	ELBOW 1/2" NPT	-
41	1	859-79	ELBOW 3/8" NPT	-
42	2	853-434	GASKET	-
43	2	868-14	CAPSCREW, HEX HD., 5/16-18 X 3/4" LG.	-
44	2	868-128	CAPSCREW, HEX HD., 5/16-18 X 1-1/4" LG.	-
45	4	952-114	LOCKWASHER, 5/16"	-
46	4	77-A-27	SPACER	-

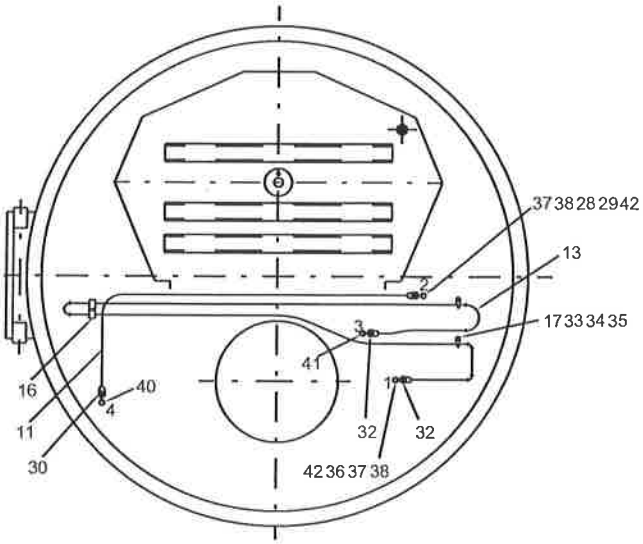

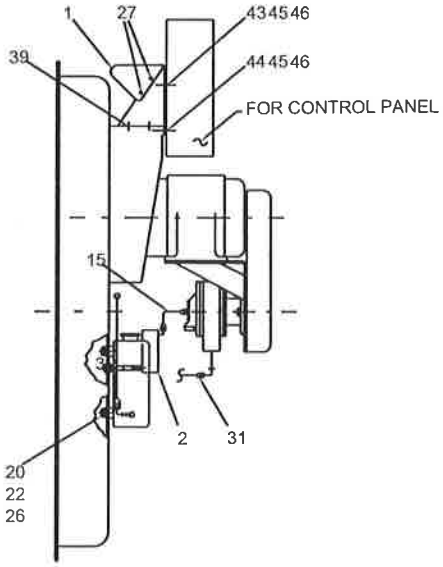

Belt Driven Air Compressor

BOLT HEAD
ON TOP

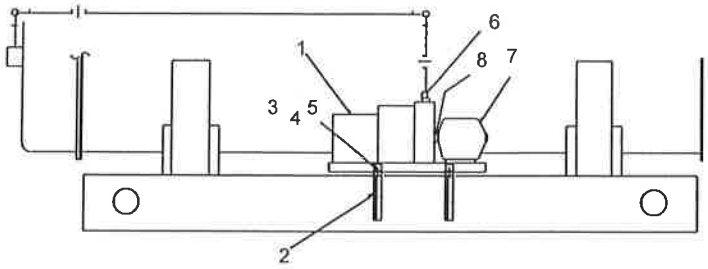

SIDE ELEVATION

BILL OF MATERIAL FOR 60" DIA.				
ITEM	QTY	PART NO.	DESCRIPTION	USED ON
1	1	505-113	COMPRESSOR ASSEMBLY	-
2	2	8-A-2345	BRACKET	-
3	4	868-104	CAPSCREW, HEX. HD. 5/16"-18 X 1" LG.	-
4	4	952-114	LOCKWASHER, 5/16"	-
5	4	952-133	WASHER, 5/16"	-
6	1	847-469	BUSHING, RED. 1" X 3/4"	-
7	1	SEE TABLE	MOTOR	-
8	1	SEE TABLE	COUPLING, HALF	-

TABLE ITEMS 11 & 12			
ITEM	200-460V (60 HZ)	600V (60 HZ)	200-380V (50 HZ)
7	894-3431	894-3432	894-2291
8	819-158	819-158	819-150

NOTES:

1. UNLESS OTHERWISE NOTED, ALL PIPE TO BE SCH. 40 ASTM A120 WELDED BLACK STL. AND ALL FITTINGS TO BE 150# M.I..
2. ALL DIMENSIONS ARE APPROXIMATE.

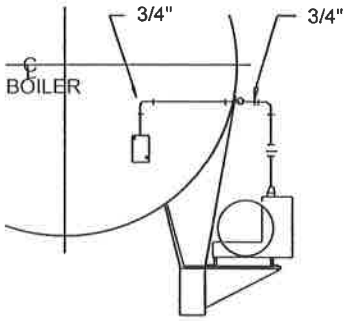

FRONT ELEVATION

Side Mounted Air Compressor Piping

ITEM	QTY	PART NO.	DESCRIPTION
1	1	827-8	BULK CONDUIT, 1/2" THINWALL EMT. X "B" LG. APPROX.
2	1	827-8	BULK CONDUIT, 1/2" THINWALL EMT. X "A" LG. APPROX.
3	1	8-A-2833	BRACKET
4	1	928-33	PIPE STRAP, 1/2" CONDUIT
5	1	868-136	CAPSREW, HEX HD. 1/4"-20 X 3/4" LG.
6	1	859-118	ELBOW, STREET, 1/2" X 45 (SEE NOTE 3)
7	1	848-141	COUPLING, 1/2" CONDUIT
8	2	848-325	CONNECTOR, STRAIGHT, 1/2" EMT. CONDUIT
9	1	848-398	COUPLING, UNION, 1/2" EMT. CONDUIT

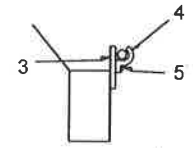

VIEW "A-A"

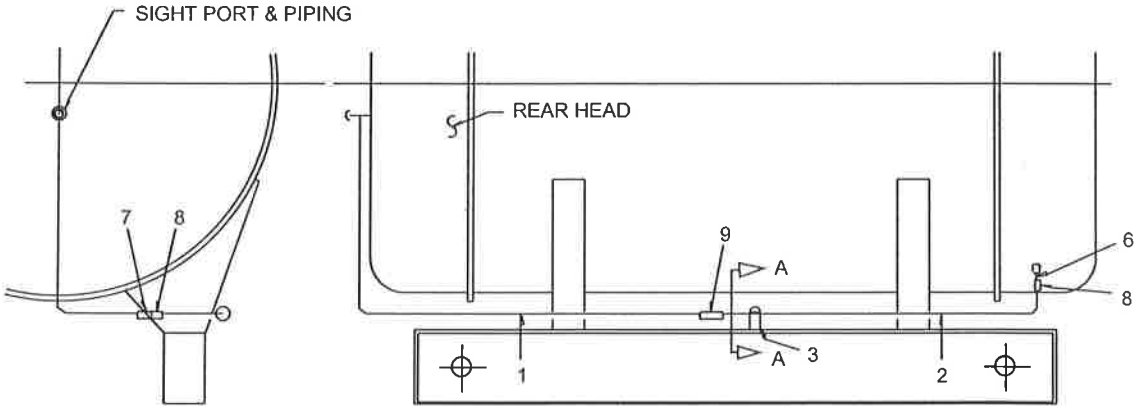

REAR VIEW

Air Line Piping

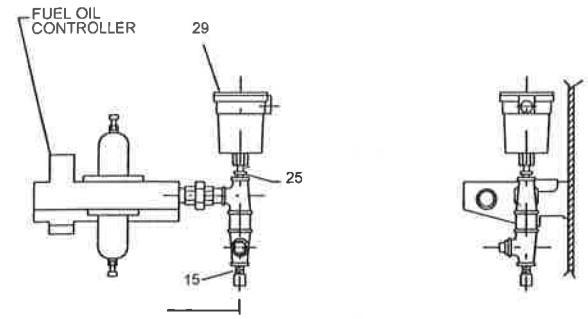

HAWK REQUIRMENT(SEE NOTE 1)

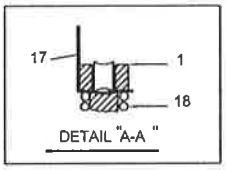

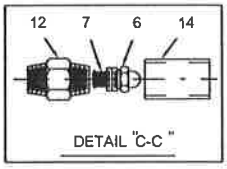

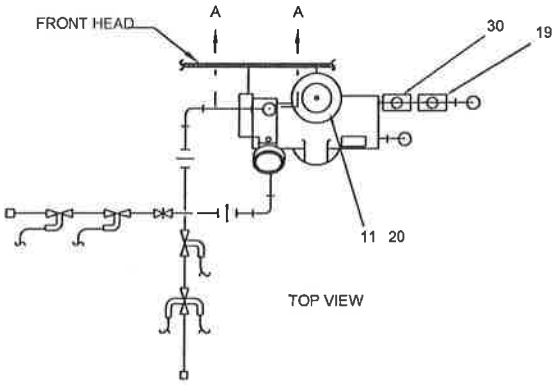

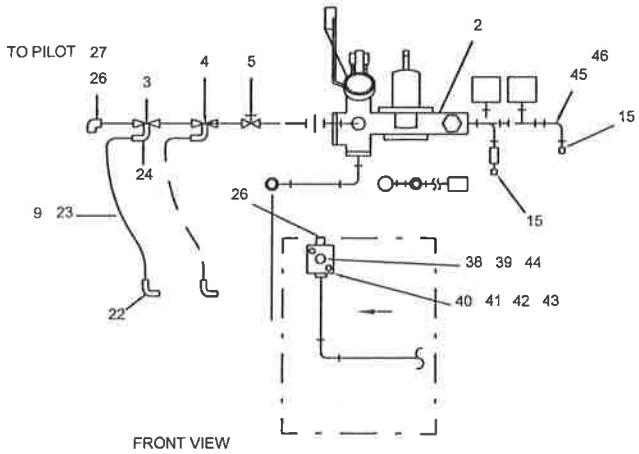

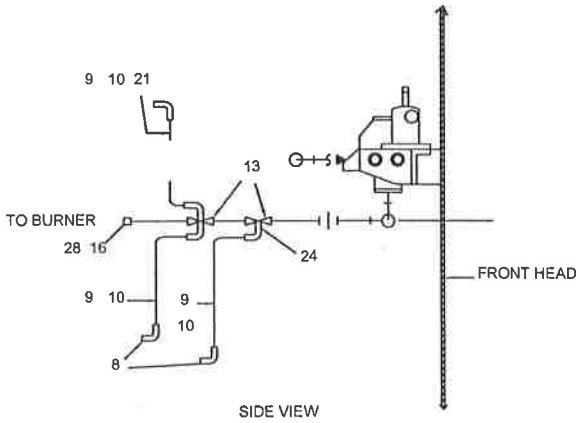

Light Oil/Air Piping-Front Head

Stem Packing Kit - 880-370
Control Valve Rebuild Kit -
Light Oil & Heavy Oil - 880-75
Heavy Oil - 880-76

ITEM	QTY OIL	QTY COM	PART NO.	DESCRIPTION	USED ON	OPTION
1	1		24-84	VALVE STEM (24-B-81)	CB125,150,	A4
	1		24-85	VALVE STEM (24-B-81)	CB 200	
2	1		739-D-73	VALVE ASSEMBLY	-	A4
3	1		948-153	VALVE - SOLENOID 1/4"	MODEL 100	A4
4	1		948-153	VALVE - SOLENOID 1/4"	MODEL 100; IRI ONLY	A4
5	1		941-914	VALVE - GATE 1/4"	MODEL 100; IRI ONLY	A4
6	1		899-51	NOZZLE, 30°, H.V.MON. #F-80, 24 GPH.	-	A4
7	1		899-14	STRAINER, MONARCH #F-80	-	A4
8	1		848-2	CONNECTOR - SQUEEZE TYPE 3/8" X 45°	60" MODEL 101 & 200	
	2		848-2	CONNECTOR - SQUEEZE TYPE 3/8" X 45°	60" MODEL 100	
9	6	4	848-100	BUSHING 3/8"	ADD QTY. 2 IF FM INS.	
10	3	2	827-6	GREENFIELD - 3/8" (CUT TO FIT)	ADD QTY. 1 IF FM INS.	
11	4		952-93	LOCKWASHER 3/8"	-	
12	1		106-A-49	ORIFICE BLOCK	-	A4
13	2		948-153	VALVE - SOLENOID 1/4"	-	A4
14	1		157-A-201	COUPLING, STEEL, 1/2" NPT	-	A4
15	2		845-312	CONNECTOR - MALE 1/2" NPT x 1/2" ODC	-	
16	1		847-526	COUPLING, RED., 3/8" X 1/4"	125-150 H.P.	
	1		847-527	COUPLING, RED., 1/2" X 1/4"	200 H.P.	
17	1		36-A-26	CAM BODY GUIDE	-	A4
18	1		82-B-83	SPRING - COMPRESSION	-	A4
19	1		817-922	HOPS (SEE NOTE 7)	KEM. ONLY	D3
20	4		868-157	CAPSCREW, HEX HD. 3/8"-16 X 1" LG.	60" ONLY	
21	1		848-2	CONNECTOR, SQUEEZE TYPE 3/8" X 45°	FM ONLY	
22	1		848-16	CONNECTOR, SQUEEZE TYPE 3/8" X 90°	MODEL 100	
23	1		827-6	GREENFIELD - 3/8" (CUT TO FIT)	MODEL 100	
24	3	2	848-3	CONNECTOR - 2 SCREW, 3/8" STRT.	-	
25	1		847-419	BUSHING, RED., 1/2" X 1/4"	HAWK ONLY	
26	2		845-9	ELBOW, 1/4" ODC X 1/4" NPT	MODEL 100 (L.O. ONLY)	
27	1		507-A-1616	TUBING - OIL TO PILOT	60" MODEL 100	A4
28	2		861-438	FLEXIBLE HOSE	125-150 H.P.	A4
	2		861-439	FLEXIBLE HOSE	200 H.P.	
29	1		817-2098	SENSOR - PRESSURE	HAWK ONLY	C3
30	1		817-1264	LOPS		D3
31	1		847-420	BUSHING, RED., 1/2" X 3/8"	FUEL 100, 125-150 HP ONLY	
32	1		836-418	PRESSURE SWITCH	60" ONLY	A4
33	2		869-140	LOCKNUT, HEX, 1/2" NPT	60" ONLY	
34	1		853-434	GASKET, 13/16"	60" ONLY	
35	1		952-292	WASHER, 15/16"	60" ONLY	
36	1		47-A-13	NIPPLE, TANK AIR LINE THRU HEAD	60" ONLY	A4
37	1		845-9	ELBOW, 1/4" ODC X 1/4" NPT, 90°	60" ONLY FUEL 100	
	1		847-545	ELBOW, RED., 1/2" X 3/8" NPT, 90°	60" ONLY FUEL 200, 125-150 HP	
	1		859-80	ELBOW, 1/2" NPT X 90°	60' ONLY FUEL 200, 200 HP	
43	1		507-A-715	TUBING - AIR TO PILOT	60" MODEL 100	A4

Light Oil/Air Piping-Front Head

CB-125	CB-150	CB-200			
QTY	QTY	QTY	ITEM	CB Part #	Description
1	1	1	1	850-109	Pressure Gauge, 0-20 PSI. 0-35"WC
1	1	1	2	507-1348	Gas Pilot Tube
1	1	1	3	817-1935	High Gas Pressure Switch 5-35"WC
1	1	1	4	817-774	Low Gas Pressure Switch 3-21"WC
1	1	1	5	948-197	Solenoid Valve, 1/2" NPT
1	1	1	6	948-54	Vent Valve, 1-1/4" NPT
1	1	1	7	825-30	Gas Cock, 1/2" NPT
1	1	1	8	945-139	Actuator, STD
1	1	1	9	945-143	Actuator, PC
1	1	1	10	940-4540	Gas Valve, Motorized 2-1/2" NPT, STD
1	1	1	11	940-4545	Gas Valve, Motorized 2-1/2" NPT, PC
2	2	2	12	941-129	Lubricated Plug Valve, 2-1/2" NPT
1	1	1	13	918-93	Regulator, Gas Pressure, 1/2", Pilot
1	1	1	14	918-703	Regulator, Gas Pressure, 2-1/2", NPT
1	-	-	-	940-133	Gas Butterfly Valve, Linkage, 2-1/2"
1	1	1	-	476-14	Gas Valve Linkage

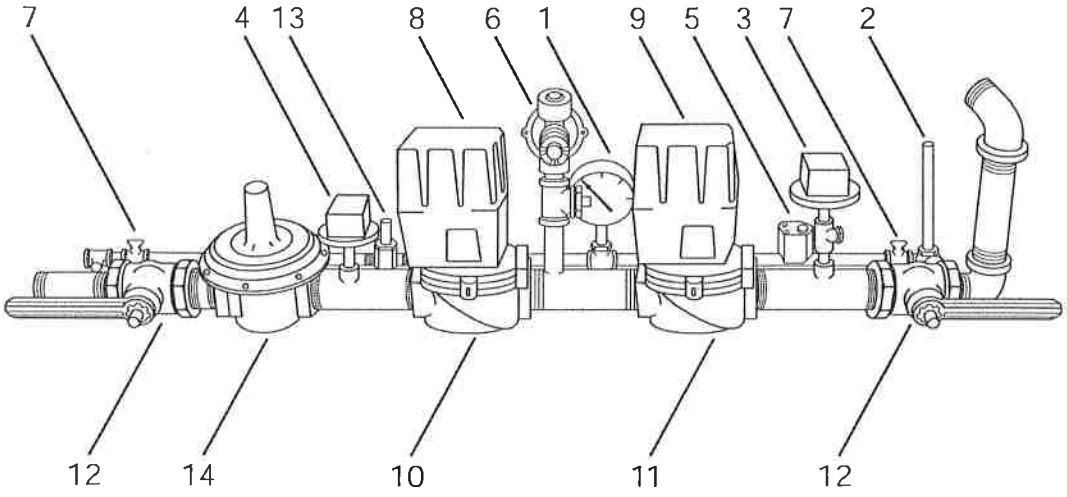

I.R.I. Approved Gas Train Assembly CB 125-200

CB-125	CB-150	CB-200			
QTY	QTY	QTY	ITEM	CB Part #	Description
1	1	1	1	850-109	Pressure Gauge, 0-20 PSI. 0-35"WC
1	1	1	2	507-1348	Gas Pilot Tube
1	1	1	3	817-1935	High Gas Pressure Switch 5-35"WC
1	1	1	4	817-774	Low Gas Pressure Switch 3-21"WC
1	1	1	5	948-197	Solenoid Valve, 1/2" NPT
1	1	1	6	825-30	Gas Cock, 1/2" NPT
1	1	1	7	945-139	Actuator, STD
1	1	1	8	945-143	Actuator, PC
1	1	1	9	940-4540	Gas Valve, Motorized 2-1/2" NPT, STD
1	1	1	10	940-4545	Gas Valve, Motorized 2-1/2" NPT, PC
2	2	2	11	941-129	Lubricated Plug Valve, 2-1/2" NPT
1	1	1	12	918-93	Regulator, Gas Pressure, 1/2", Pilot
1	1	1	13	918-703	Regulator, Gas Pressure, 2-1/2", NPT
1	-	-	-	940-133	Gas Butterfly Valve, Linkage, 2-1/2"
-	1	1	-	940-134	Gas Butterfly Valve, Linkage, 3"
1	1	1	-	476-14	Gas Valve Linkage

* THE ACTUATORS ARE INCLUDED W/ ITEMS #1 & 3 GAS VALVES.
** FOR ALL HAWK, ITEM #7 IS NOT USED AND REPLACE ITEM #8 WITH STANDARD PIPE NIPPLE.

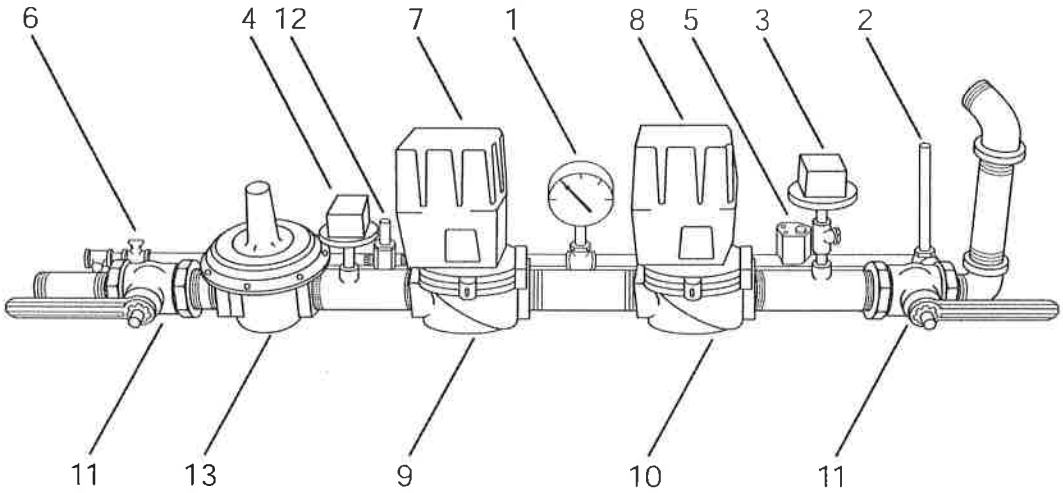

Standard and FM Approved Gas Train Assembly CB 125-200

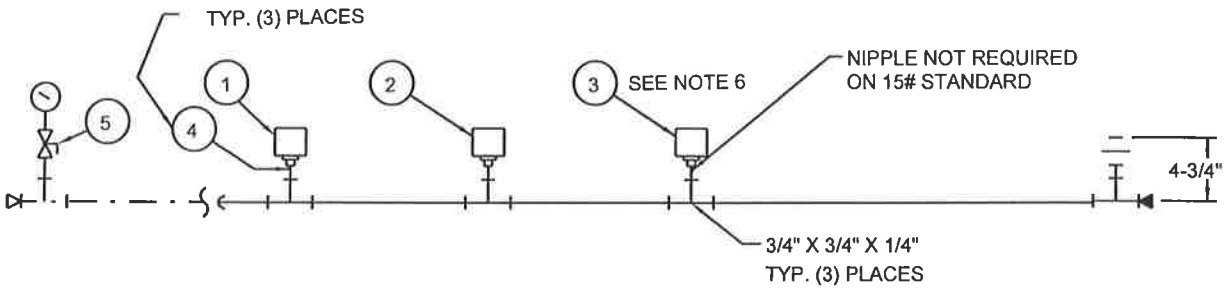

300 #	150# - 250 #	16# - 150#	15#	BILL OF MATERIAL				
PART NO.	PART NO.	PART NO.	PART NO.	ITEM	QTY	PART NO.	DESCRIPTION	USED ON
817-111	817-111	817-110	817-16	1	1	SEE TABLE	CONTROL PRESSURE (OLC)	
817-900	817-900	817-109	817-415	2	1	SEE TABLE	CONTROL PRESSURE (HLC)	-
817-234	817-234	817-204	817-251	3	1	SEE TABLE	CONTROL PRESSURE (MC)	
857-726	857-448	857-448	857-448	4	3	SEE TABLE	NIPPLE - 1/4" x 1-1/2"	-
941-318	825-31	825-31	825-31	5	1	SEE TABLE	GAUGE COCK - 1/4"	

Steam Pressure Controls

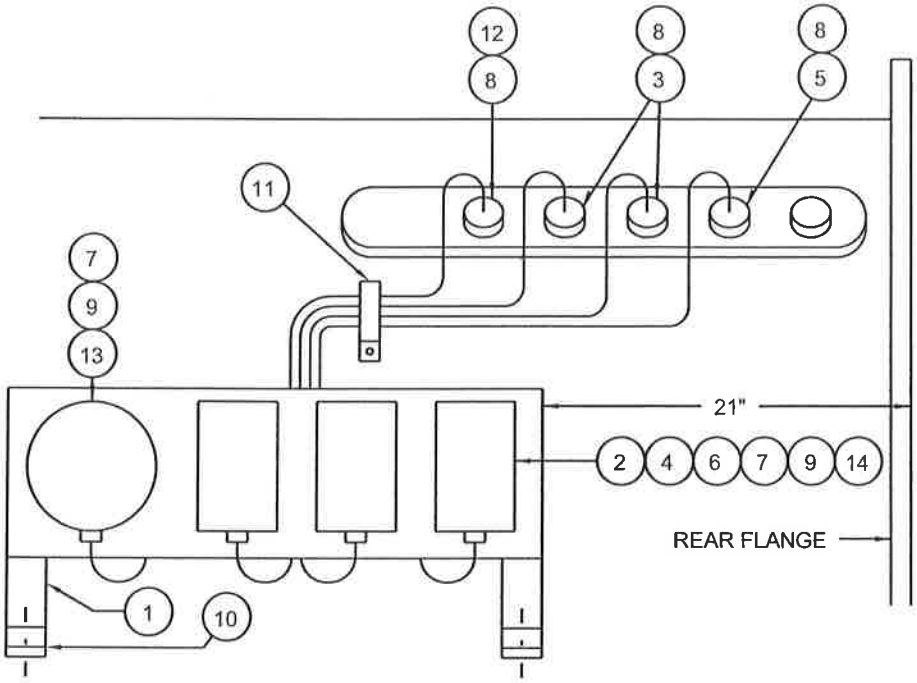

ITEM	CB70/CB100/E100 240-280 DEG F. HTHW QTY	P/N	CB70/CB100/E100 281-360 DEG F. HTHW QTY	P/N	CB70/CB100/E100 30-125 HW QTY	P/N
1	1	8-995	1	8-995	1	8-967
	1	8-995	1	8-995	1	8-995
2	1	817-1249	1	817-1249	1	817-1244
3	2	817-699	2	817-699	2	817-399
4	1	817-1281	1	817-1257	1	817-1050
5	1	817-1028	1	817-1028	1	817-378
6	1	817-698	1	817-700	1	817-400
7	9	860-4	9	860-4	9	860-4
8	2	847-152	2	847-152	4	847-152
9	9	869-9	9	869-9	9	869-9
13	1	937-710	1	937-710	1	937-59
	1	937-673	1	937-673	1	937-27
14	2	008-01317	2	008-01317	-	-

Hot Water Temperature Controls

BILL OF MATERIAL					
ITEM	QTY	PART NO.	DESCRIPTION	WHERE USED	OPTION STD
1	-	-	BRACKET (8B937)	60"	D3
2	-	-	TEMPERATURE CONTROL (MC)	-	D3
3	-	-	WELL SEPARABLE	-	D3
4	-	-	TEMPERATURE CONTROL (HLC)	-	D3
5	-	-	WELL SEPARABLE	-	D3
6	-	-	TEMPERATURE CONTROL (OLC)	-	D3
7	-	-	MACH. SCR. #10-32 x 3/4"	-	--
8	-	-	BUSHING RED 3/4" x 1/2"	-	--
9	-	-	NUT MACH. SCR. #10-32	-	--
10	4	841-571	SHT. MTL. SCR. #10-32 x 5/8"	-	--
11	1	928-39	STRAP - PIPE	-	--
12	1	817-641	SOCKET SEPARABLE	-	D3
13	-	-	THERMOMETER	60"	D3
14	-	-	MTG.BRACKET	-	D3

Hot Water Temperature Controls

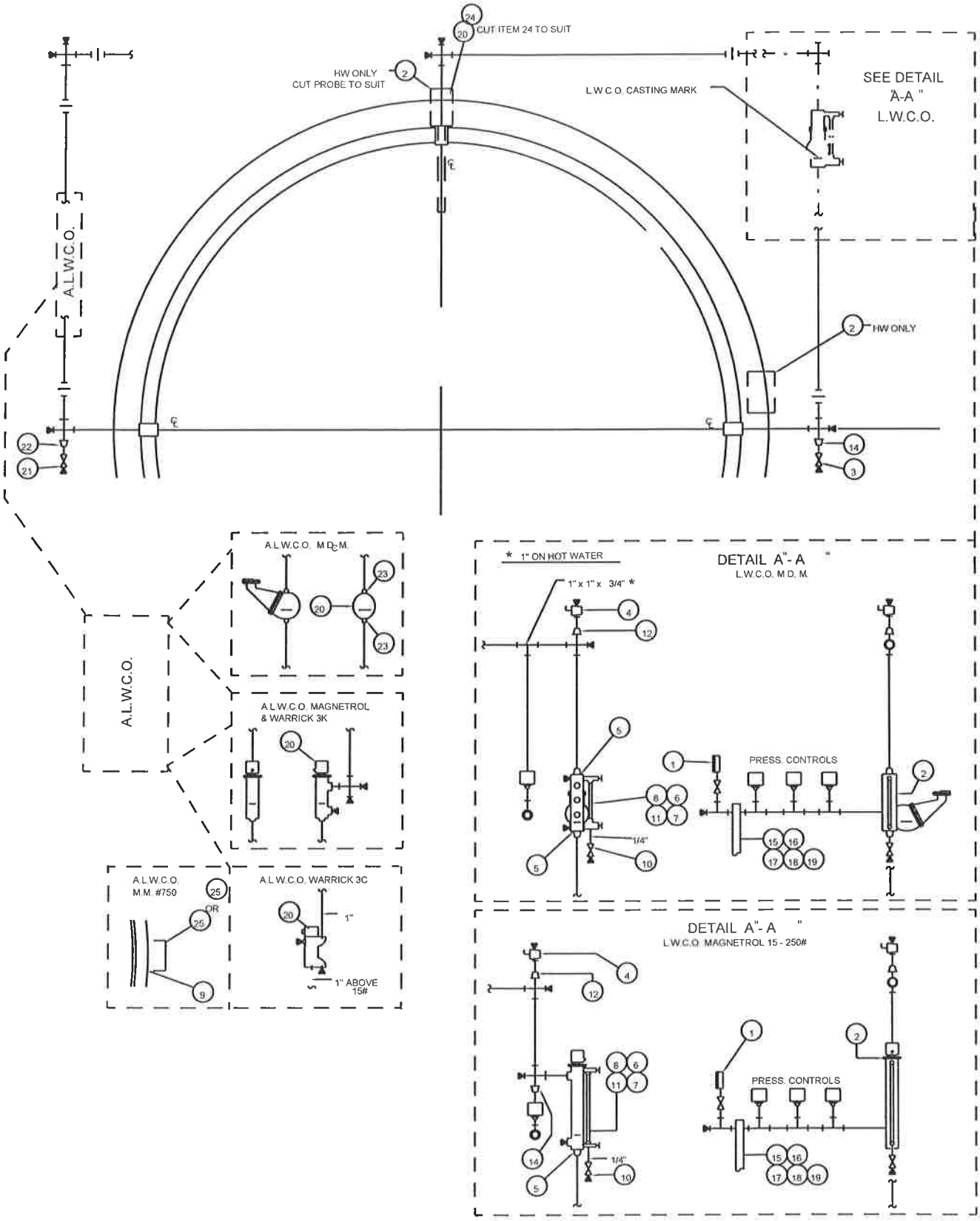
CUT ITEM 24 TO SUIT
HW ONLY
CUT PROBE TO SUIT
L.W.C.O. CASTING MARK
SEE DETAIL
"A-A"
L.W.C.O.
A.L.W.C.O.
HW ONLY
A.L.W.C.O. M.D.M.
A.L.W.C.O. MAGNETROL
& WARRICK 3K
A.L.W.C.O.
M.M. #750
OR
A.L.W.C.O. WARRICK 3C
1"
1" ABOVE
15#
* 1" ON HOT WATER
DETAIL "A"- A
L.W.C.O. M.D.M.
1" x 1" x 3/4" *
PRESS. CONTROLS
1/4"
DETAIL "A"- A
L.W.C.O. MAGNETROL 15 - 250#
PRESS. CONTROLS
1/4"

INTERNAL A.L.W.C.O.
(ABOVE 15# ONLY)

	TEM	QTY			USED ON
WARRICK	20	1	817-740	CONTROL, AUX. L.W.C.O. WARRICK 3E2B	✿ 30#-200#
WARRICK		1	817-1020	CONTROL, AUX. L.W.C.O. WARRICK 3E3B	✿ 30#-200#
M.D. M.		1	817-MM	CONTROL, AUX. L.W.C.O. MM 750MT-120	✿ 15#-250#
	24	2	67-533	ROD,ELECTRODE, 1/4" DIA X 24" LG.	✿ 3E2B
		3	67-533	ROD,ELECTRODE, 1/4" DIA X 24" LG.	✿ 3E3B

EXTERNAL A.L.W.C.O.

	TEM	QTY			USED ON
M.D. M.	20	1	817-98	CONTROL, AUX. L.W.C.O. (AUTO RESET)	15#
		1	817-97	CONTROL, AUX. L.W.C.O. (MANUAL RESET)	150#
		1	817-306	CONTROL, AUX. L.W.C.O. (MANUAL RESET)	200-250#
MAGNETROL	20	1	817-301	CONTROL, AUX. L.W.C.O.	15-250#
		1	817-1251	CONTROL, AUX. L.W.C.O.	300#
WARRICK	20	1	817-2372	CONTROL, AUX. L.W.C.O. WARRICK 3C2A	15-250#
		1	817-820	CONTROL, AUX. L.W.C.O. WARRICK 3C3B	15-250#
		1	817-2259	CONTROL, AUX. L.W.C.O. WARRICK 3K3A	15-250#

TEM	QTY	PART NO. M.D. M.	PART NO. MAGNETROL	DESCRIPTION	USED ON
1	1	850-230		PRESSURE GAUGE- 6" DIA	15# ST
	1	850-222		PRESSURE GAUGE- 6" DIA	150-200# ST
	1	850-134		PRESSURE GAUGE- 6" DIA	250# ST CB125S-175S
	1	850-320		PRESSURE GAUGE- 6" DIA	250# ST
	1	850-400		PRESSURE GAUGE- 6" DIA	300# ST
	1	850-223		PRESSURE GAUGE- 6" DIA	30# HW
	1	850-283		PRESSURE GAUGE- 6" DIA	60# HW
	1	850-221		PRESSURE GAUGE- 6" DIA	125# HW
	1	850-222		PRESSURE GAUGE- 6" DIA	150# HW
2	1	817-226	817-163	LOW WATER CUT-OFF	15# ST
	1	817-95	817-163	LOW WATER CUT-OFF	150# ST
	1	817-303	817-163	LOW WATER CUT-OFF	200-250# ST
	1	———	817-1962	LOW WATER CUT-OFF	300# ST
1	-	-	———	-	
	1	817-2305	CONTROL, WATER LEVEL PROBE TYPE, MDL. 750		ALL HW
	1	817-2306	REMOTE SENSOR, PROBE HOLDER, MDL. 750		
	1	817-2307	PROBE EXT., 24"LG, FOR REMOTE SENSOR, MDL. 750		
3	1	941-1790		VALVE, BALL 3/4"	15-200# ST
	1	941-401		VALVE, GLOBE 3/4"	250# ST
	2	941-401		VALVE, GLOBE 3/4"	300# ST
4	1	825-31		COCK, UNION, BRASS	15-250# ST
	1	———	941-318	VALVE, GLOBE 1/4", BRASS	300# ST
5	2	847-472	———	BUSHING 1-1/4" X 1"	200-250# ST
	1	———	847-432	BUSHING 1-1/4" X 1"	15-150# ST
	1	———	847-472	BUSHING 1-1/4" X 1"	200-250# ST
	2	———	847-472	BUSHING 1-1/4" X 1"	300# ST
6	1	851-199	851-38	GAUGE GLASS	15-250# ST
	1	———	851-321	GAUGE GLASS	300# ST
7	4	912-85	———	ROD, GAUGE GLASS	15-250# ST
	2	———	912-38	ROD, GAUGE GLASS	15-250# ST
8	1	825-132		SET, GAUGE GLASS	15-200# ST
	1	825-352		SET, GAUGE GLASS	250# ST
	1	———	825-357	SET, GAUGE GLASS	300# ST
9	1	059-6628		SIZED PLATE, #14 x 7" x 11"	M.M #750
10	1	941-55		VALVE, BALL 1/4"	15-200# ST
	1	941-318		VALVE, GLOBE, 1/4"	250-300# ST

TEM	QTY	PART NO. 15-150#	PART NO. 200-250#	PART NO. 300#	DESCRIPTION	USED ON
11	.	830-28			CHAIN SASH	250-300 ST
12	1	847-424	847-467		BUSHING 1" X 1/4"	ALL ST
13	1	———		847-612	BUSHING 1/2" X 1/4"	MAGNETROL
14	1	847-426	847-469		BUSHING 1" X 3/4"	MAGNETROL ST ONLY
15	1	928-46			THINWALL CLAMP 1"	HW
	1	928-45			THINWALL CLAMP 3/4"	ST
16	1	868-405			CAPSCREW HEX. HD. 1/4-20 x 3/4" LG.	-
17	2	952-145			WASHER, PLAIN 1/4"	-
18	1	952-92			LOCKWASHER 1/4"	-
19	1	869-21			NUT 1/4"-20	-
20	1	SEE TABLE			CONTROL, AUX. L.W.C.O.	
21	1	941-1790			VALVE, BALL 3/4"	15-200#
	1	941-401			VALVE, BALL 3/4"	250-300#
22	1	847-426			BUSHING 1" x 3/4"	15-150#
	1	847-469			BUSHING 1" x 3/4"	200-250#
23	2	847-472			BUSHING 1-1/4" x 3/4"	200-250#

Notes

NOTES

Cleaver-Brooks®

Performance Proven Worldwide

e-mail: info@cleaver-brooks.com
Web Address: http://www.cleaver-brooks.com

Schedule 9d - Build and Ground Services

1 Introduction and general instructions

This specification includes the Provision of Building and Landscaping/Grounds Services for ABB

The Property Service includes:

- BGS1 Landscaping and Grounds Service
- BGS2 Building Exterior
- BGS3 Building Interior
- BGS4 HVAC incl. Cooling
- BGS5 Electricity installation
- BGS6 Electricity installation – Low voltage - Security and Safety
- BGS7 Elevators, Lifts and other Transport Systems
- BGS8 Building Control Management and Energy Optimization
- BGS9 Building and Ground Maintenance Project Management

Section 1.1 to 1.6 from Schedule 9a apply to this Schedule. In addition, the following sections apply to this Schedule.

1.7 Knowledge and experience

Supplier´s personnel are to have the type of experience and knowledge to do the following for ABB:

- Provide qualified technical advice.
- Develop requirement specifications for rebuilds and new installations of technical facilities. Requirement specifications are to be based on operating economy, investments, durability, security, the avoidance of downtime, and lifetime considerations.
- Impact assessments that are to describe various operational and investment alternatives.

1.8 Definitions

The following definitions shall apply to Schedule 9d and 9d1 (and 9g):

Care	Operational measures that include one or more of the measures for adjustment or care of the management object, fixtures, equipment, exchanging or provision of consumables. *Cf. waste handling, operation, supply of utilities, cleaning, and supervision.* *Examples of measures that are included in care are adjustment of doors, burners, cleaning, refuse collection, snow removal, exchange of air filters, and updating of files.*
Corrective Maintenance	Maintenance carried out to rectify a function, which, unforeseen, has reached an unacceptable level. *Cf. urgent maintenance, planned maintenance.* *Unforeseen refers to the impossibility of foreseeing which management object is affected by the fault or the time this occurs. Corrective maintenance is divided into urgent maintenance and other corrective maintenance. It is normally carried out by repair or exchange after fault reports from end users, inspection reports or alarms.* Supplier's responsibility for corrective maintenance measures to the object/installations/equipment is limited to the management objects/installations/ equipment the age of which is less than that specified in Exhibit 09d1 *Exceptions - Corrective maintenance.*
Planned maintenance	Maintenance which is planned with regard to time, type and scope. *Cf. corrective maintenance.*
Supervision	Operational measures that include observation of the function in a management object, a fixture or fitting or in the equipment, and reporting of possible deviations. *Cf. operation, supply of utilities, rounds, care.* *Supervision may include use of measuring devices. Examples of supervision are reading of oil levels and control of cleaning.*

1.9 Clarification – general

Supplier must perform all services within this document per the following requirements:

- Perform corrective- and trouble-shooting maintenance and repairs. Trouble-shooting and corrective maintenance less than US $2,500 per occasion and object/building section are included in Supplier´s Budget ("Maintenance Threshold"). In cases when the project or trouble-shooting maintenance exceeds the Maintenance Threshold, Supplier will cover the amount up to the Maintenance Threshold within the Budget and ABB will pay for the amount above the Maintenance Threshold. The Maintenance Threshold amount includes the cost of all labor, materials, subcontractors, and

consumables required for the activity. Supplier is not permitted to combine several smaller corrective or trouble-shooting maintenance items into a single item in order to exceed the Maintenance Threshold.

- Maintenance projects valued at less than US $2,500 per occasion and tasks are included in Supplier's Budget ("Project Threshold"). In cases when Maintenance projects exceed the Project Threshold, Supplier will cover the amount up to the Project Threshold within the Budget and ABB will pay for the amount exceeding US $2,500 ("Project Threshold"). Execution of small maintenance project should include project management, man-hour (craftsmen), materials, sub supplier, travel should be included in the Budget. Medium and Large sized maintenance project - see Schedule 9d BGS 9. Supplier is not permitted to combine several smaller Maintenance projects into a single item in order to exceed the Project Threshold.
- Perform supervision and maintenance according to the supplier´s planned Maintenance Inspections Schedules (see "Planning of Maintenance Inspections Schedule"– Schedule 9a FM1).
- The service includes replacing and supplying Consumables within the Budget such as ventilation filters, fan belts, oil, coolants/refrigerants, light bulbs, control devices (HF), glow switches, fluorescent lamps, led lighting, other lighting sources, fuses, batteries, etc., in operating spaces and general/common spaces like tenant areas (individual spaces).
- Supplier shall subscribe for all service agreements necessary for the safe operation of the property. Supplier may choose to perform service with its own personnel if Supplier staff has the requisite skilled expertise. Service agreements are classified as Supervision & Care and are included in the Budget (regardless of amount) - see Schedule 9d.1- Building, Ground and Security Services work included and frequencies.
- Perform and report necessary work related to building schedule inspections – Supplier is to plan and carry out rounds based on industry experience, local legislation and best practice for each unit/object/building section. However Schedule 9d.1 specifies the minimum required frequency for rounds.
- Ensure that all inspections requested by authorities are performed within the correct timeframe and inspections reports are developed and provided to ABB. ABB is to be given the possibility to be present at inspections.
- The service includes performing and financing for all measures required by authorities, such as inspections, environmental audits, compiling and reporting statistics, test sampling, etc. Supplier compiles all reports/statistics and sends them to ABB, which is responsible for sending the information to the respective authority.
- Supplier is to insure that incidents of Urgent and Critical nature can be remedied on a 24/7 basis – on-call service is part of Supplier´s regular undertaking. Other matters are to be remedied in accordance with §4.2 (below)
- Carry out maintenance work with the established drawings, descriptions and operating instructions, and the instructions of the manufacturer. If no documentation is available, maintenance on equipment/the building is to be performed in a professional manner to maintain good operation, durability and ensure a minimum impact on the work environment.
- Supplier is to document all changes to the building and installations resulting from measures and projects carried out by Supplier, relevant information related to this shall be registered and updated in Supplier's Case and Helpdesk Management System. Drawings and descriptions, such as Operation, Maintenance instructions, are to be continuously updated. This is Supplier´s responsibility and Supplier responsible of financing for the cost
- All "Maintenance Inspections Schedules ("Rounds")" maintenance measures, corrective- and trouble-shooting maintenance and projects is to be reported in Supplier´s Case and Helpdesk Management System when the measures will be carried out - via PDA
- Supplier is to accompany and assist auxiliary suppliers hired by ABB and authorities so that work is carried out in a cost-effective manner, for example, when performing planned maintenance, carrying out emergency measures and during inspections by authorities, etc.
- Supplier´s undertaking includes planning the work in a way that minimizes disturbances. If work, or the nature of the work, requires that it be done outside normal working hours, this work is included in Supplier´s Budget.
- For rules and regulations regarding use of chemicals and fighting agents - see Schedule 11 ABB standards and Policies (White and Blacklist)
- In Brazil all consumables for maintenance (care, planned or corrective) or costs not included in the contract scope will be paid by ABB.

1.10 Clarification Corrective Maintenance and Status Inspection

General – Transition Phase

During the Transition Phase, the parties will jointly carry out a status inspection to investigate whether there are areas / objects that are not maintained in a manner expected and professional

1. Faults and defects discovered during the Status Inspection in the Transition Phase

During the Transition Phase the Supplier must carry out a Status Inspection of the ABB Locations. If it is discovered whilst the Status Inspection is being conducted that any equipment or systems at the ABB Locations are suffering from serious faults or defects, the Supplier must document the fault or defect in a suitable manner, e.g. by taking photographs, and report it in writing to ABB. The written report must include a description of the equipment or systems, a description of the fault or defect and an evaluation of how serious the fault or defect is. The ABB Locations and equipment/systems which the Parties agree were observed to have serious faults or defects during the Status Inspection will be included in the property list in Faults and Defects List ("Faults and Defects List"), after the Status Inspection has been carried out. ABB shall have final authority to determine which items are included in or excluded from the Faults and Defects List.

If ABB chooses to allow such a serious fault or defect to remain without further action to mitigate the fault or defect, the Maintenance Threshold shall not apply to such equipment or systems. The repair of additional faults or defects by the Supplier that occur because ABB has allowed identified faults or defects to remain without further action must be paid for by ABB without the application of the Maintenance Threshold.

For all properties/parts of buildings included in the Faults and Defects List, foreseen is defined situation where damage will occur in due course and Faults and Defects in these properties are not included in the definition of Corrective Maintenance. For all properties/parts of buildings not included in the Faults and Defect List they are regarded as unforeseen and by definition are included in the definition of Corrective Maintenance.

The Supplier shall regardless of age and status always perform Supervision and Care within the Budget.

2. Reinvestments

If, after the Transition Period, it is discovered that any equipment or systems at an ABB Location is not regarded as repairable or should not be repaired due to other relevant factors, or that Corrective Maintenance is increasing to a considerable extent, and this is not because the Supplier has not fulfilled his responsibility according to the Agreement, the Supplier shall inform ABB in writing of the need for reinvestment with reasonable foresight.

If ABB chooses to ignore such a need for reinvestment without further action, then such item will be added to the Faults and Defects List (subject to ABB's approval), and the Maintenance Threshold shall not apply to any such equipment or system. The Supplier's repair of additional faults or defects that arise because ABB chooses to ignore the need for reinvestment without further action must be paid for by ABB without the application of the Maintenance Threshold.

Where the Parties agree that there is a need for reinvestment, the Faults and Exhibits List must be updated. When ABB has reinvested in respect of the item in the Fault and Defects List, and there is no longer a serious fault or defect, the Faults and Defects List must be updated correspondingly to reflect removal of the equipment or system.

3. If Status Inspection is not performed

As an alternative, if the Status Inspection is not performed for a piece of equipment or system or object - generally, when the Technical amortization period ("Technical Amortization Period") has been achieved, the Maintenance Threshold shall not apply for the affected parts of the building / object. The Technical Amortization Period is defined in in Schedule 9d.1.

The Supplier shall, regardless of age and status of any building, equipment or system, always perform Supervision and Care within the Budget

1.11 Warranty and Service Contracts Administration

Certain equipment or components falling within this Schedule may be, now or in the future, covered by a warranty or service contracts covering some or all maintenance and repairs, up to and including replacement. These arrangements do not relieve Supplier from final accountability for the function of the equipment.

Supplier is responsible to ensure that ABB does not pay for services or materials for which it is entitled to service under warranty or service contracts.

Supplier shall manage warranty and service contract work, including the following activities:

- Administer and retain all warranties and service contracts relating to assets or components covered under this SOW.
- Ensure that all maintenance and repair activities are performed in a way to maintain validity of all warranties.
- Where warranty services is required, contact warranty vendor and ensure proper performance of all work performed.
- In the event of a failure covered under warranty, where the warranty vendor does not perform required duties and where this is adversely impacting ABB, Supplier will take necessary action to restore the service and promptly report the problem to ABB.
- All warranty-related activity will be documented in the Case and Helpdesk System.

2.0 Service

Supplier is required to deliver according to Service Function Requirement and its Acceptance Criteria in each Service description. "Included service in Budget" description should be seen as information about what services are included and are not exhaustive in scope.

2.1 Clarification of Scope

Schedule 9d - Building and Ground Services

Services - Terms	Included service	Pricing	Process	Responsible	
				Budget	Execution
Supervision & Care					
Technical inspections and services, routine maintenance prescribed by law, producer etc. (elevators, fires safety systems, etc.)	Scheduled Inspectition, Service Agreements, Lamps, Ventilation Filters etc	Included in Annual Budget	Process S&C	Supplier	Supplier
Corrective Maintenance					
Repairs of damages Note: Priority / Criticality	Small Scale Corrective maintenance (<2,500)USD/measure)	Included in Annual Budget	Process CM 1	Supplier	Supplier
	Other Corrective maintenance (>2,500)USD/measure)	Included in Annual Budget (<2,500) Surplus amount (>2,500) USD/Measure) will be invoiced to B	Process CM 2	ABB	Supplier
Planned Maintenance					
Maintenance measures, strategic maintenance	Small Maintenance Measures (<2,500)USD/measure)	Included in Annual Budget	Process PM 1	Supplier	Supplier
	Medium Maintenance Project (2,500 - 10000 USD/measure)	Project - Basis - included in Scope. Additional Pricing - see Exhibit 05b or agreed Annual Budget	Process PM 2	ABB	Supplier
	Large Maintenance Project (> 10000 USD/measure)	Not included in Scope Ordered by B on a project basis, in open competition with other suppliers	Process PM 3	ABB	ABB
Project - Non Maintenance	Refurbishment, Upgrade, New Building, etc (Regardles of amount)	Not included in Scope Ordered by B on a project basis, in open competition with other suppliers	Process PR 1	ABB	ABB

Schedule 9d - Building and Ground Services

BGS 1	Landscaping and Grounds Service
Definition	
Perform technical property service of external areas	
Service function requirements	Minimum acceptance criteria
• Snow and Ice Removal: Keep safe conditions and according to law/government regulations in certain countries must be adhered as well. Height of snow to be adjusted to specific locatoin, some special requirements (e.g., forklift) to be addressed • Supplier should design and update Snow Shoveling Priority Plans (roads, parking, pavements, entrances and storage area, etc.) and according to ABB demands • Supplier should design and update Snow Shoveling Priority Plans (showing the location and "important and sensitive roofing") according to ABB demands • Daily follow up and executing of existing errands incoming during the night/weekends • Perform Supervision & Care and Corrective Maintenance according to the supplier´s planned Maintenance Inspections schedules (see "Planning of Maintenance Inspections Schedule"– Schedule 9a FM1). • Maintain an appealing state of landscaping and grounds	• The agreed CSI [Customer Satisfaction Index] level shall be maintained or improved. • Supplier is to carry out the assignment according to the policies and procedures established by ABB. Supplier is also to have a regular and ongoing dialogue with ABB´s manager for the service. • Plan and carry out all measures and initiatives in a professional manner, and in such a way, that the building´s standard is maintained, and that the building provides a safe working environment that remains safe. • The work is to be planned and carried out to minimize disturbances (for example, accessibility, noise, odors', etc.). • All measures and work are to be reported in Supplier´s Helpdesk Management System. • All changes to the building and its installations are to be documented, and registered and updated in Supplier's Case and Helpdesk Management System. • Service 24/7 - outside of normal work hours, only incidents designated as Urgent and Critical are to be taken care of. • Ensure that users and equipment have a good environment with regard to temperature and moisture
Included services in Budget "Included service" - Service-description should be seen as information about what services are included and are not exhaustive in scope. All personnel must thus perform typical general duties related to the specific Schedule even if they are not listed in the Schedule and applies to all sites and service. Applies whether the task is possible to plan or "ad hoc".	
Ground service (supervision, care, inspection and corrective maintenance) • Snow cleaning and De-icing/gritting • Cleaning of roads, parking spaces and sidewalks (removal of sand and dirt) • Oil, Sand and Grease Separator's (outside and in ground) • Repair of "holes" in asphalt • Shrubs and Hedges • Flower beds - Flower boxes – Flower urns • Grass mowing • Inspection and care of trees • Exterior Lighting • Flagpole • Electric engine heaters and charging post (electric cars) • Fire hydrants outside • Electric Heating Coils – ground and entrances • Pest Control (birds and pests)	

- Replacement of fluorescent lamps, electric bulb, other lighting sources, HF-devices, starters and batteries on an ad hoc basis, and when periodic/planned replacements are scheduled in all outside places
- De Icing material will be decided during the Implementation Phase (Sand, Salt, Urea or Woodchips)

See objects and services listed in Schedule 9d.1

BGS 1	**Landscaping and Grounds Service**
Services not included in s budget (to be invoiced separately as specified Schedule 2 – Pricing and Financial Provisions).	Services that are not included (Supplier is not responsible for the following services):
• Damage, incl. graffiti • Medium sized Maintenance Projects – work (craftsmen), Sub Suppliers and material – see Schedule 9d BGS.9 • Painting of lines (parking) and Parking signs	• Planned Large Maintenance Project and other Projects – normally handled by ABB, and ordered by ABB on a project basis, in open competition with other suppliers on the market – see also Schedule 9d BGS.9 • Clean-up work in connection with breakdowns/accidents – such as fires, water leaks, etc. Immediate and critical actions in connection with breakdowns/accidents are included in ABB's responsibility
Clarification	
• Schedule 2 to the Supplement Site Data (Area description, drawing snow cleaning, drawing ground area	

BGS 1						**Landscaping and Grounds Service**
Responsibility			Included in Supplier´s budget.			Clarification
Function	Consumables	Equipment & accessories	Function	Consumables	Equipment and accessories	
Yes	Yes	Yes	Yes	Yes, except in Brazil	Yes, refer to clarification	• Supplier supplies clothing, tools, machinery, and protective equipment and transport equipment. • Supplier supplies consumables (see § 1.8 above). • Supplier supplies material, Sub Supplier and performs the work for trouble-shooting maintenance and for small projects. • Supplier is responsible, signing contact and finance for service and on-call contracts with the necessary suppliers. • Supplier is responsible and finance for all measures, including inspections, requested by authorities, on condition that the cost is attributable to normal operations.

Schedule 9d - Building and Ground Services

BGS 2	Building's Exterior
Definition	
Perform technical property service of the building exterior.	
Service function requirements	Minimum acceptance criteria
• Daily follow up and executing of existing errands incoming during the night/weekends • Perform Supervision & Care and corrective Maintenance according to the Supplier´s planned Maintenance Inspections schedules (see "Planning of Maintenance Inspections Schedule"– Schedule 9a FM1).	• The agreed CSI [Customer Satisfaction Index] level shall be maintained or improved. • Supplier is to carry out the assignment according to the policies and procedures established by ABB. Supplier is also to have a regular and ongoing dialogue with ABB´s manager for the service. • Plan and carry out all measures and initiatives in a professional manner, and in such a way, that the building´s standard is maintained, and that the building provides a safe working environment that remains safe. • The work is to be planned and carried out to minimize disturbances (for example, accessibility, noise, odor's, etc.). • All measures and work are to be reported in Supplier´s Case and Helpdesk Management System. • All changes to the building and its installations are to be documented, and registered and updated in Supplier's Case and Helpdesk Management System. • Service 24/7 - outside of normal work hours, only incidents designated as Urgent and Critical are to be taken care of. • Ensure that users and equipment have a good environment with regard to temperature and moisture
Included services in Budget "Included service" - Service-description should be seen as information about what services are included and are not exhaustive in scope. All personnel must thus perform typical general duties related to the specific Schedule even if they are not listed in the Schedule and applies to all sites and service. Applies whether the task is possible to plan or "ad hoc".	
Building External (supervision, care, inspection and corrective maintenance) • Roof • Facade • Windows • Doors – Manual and Automatic • Outdoor Sunscreen/protection • Ventilation (HVAC) hoods / intake • Electric Heating Coils - in Gutters, Valley gutters, Downpipes • And all other components of ABB not listed here • Replacement of fluorescent lamps, electric bulb, other lighting sources, HF-devices, starters and batteries on an ad hoc basis, and when periodic/planned replacements are scheduled on the façade or roof of building See objects and services listed in Schedule 9d.1	

BGS 2	Building's Exterior
Services not included in Supplier´s budget (to be invoiced separately as specified in Schedule 2 – Pricing and Financial Provisions	Services that are not included (Supplier is not responsible for the following services):
• Damage, incl. graffiti • Medium sized Maintenance Projects – work (craftsmen), Sub Suppliers and material – see Schedule 9d BGS.9	• Planned Large Maintenance Project and other Projects – normally handled by ABB, and ordered by ABB on a project basis, in open competition with other suppliers on the market – see also Schedule 9d BGS.9 • Clean-up work in connection with breakdowns/accidents – such as fires, water leaks, etc. Immediate and critical actions in connection with breakdowns/accidents are included in ABB's responsibility
Clarification	
Schedule 2 to the Supplement Site Data	

BGS 2						Building's Exterior
Responsibility			Included in Supplier´s budget.			Responsibility
Consumables	Equipment and accessories	Consumables	Equipment and accessories	Consumables	Equipment and accessories	
Yes	Yes	Yes	Yes	Yes, except in Brazil	Yes, refer to clarification	• Supplier supplies clothing, tools, machinery, and protective equipment and transport equipment. • Supplier supplies consumables (see § 1.8 above). • Supplier supplies material, Sub Supplier and performs the work for trouble-shooting maintenance and for small projects. • Supplier is responsible, signing contact and finance for service and on-call contracts with the necessary suppliers. • Supplier is responsible and finance for all measures, including inspections, requested by authorities, on condition that the cost is attributable to normal operations.

BGS 3	Building's Interior
Definition	
Perform technical property service of the building interior.	
Service function requirements	Minimum acceptance criteria
• Daily follow up and executing of existing errands incoming during the night/weekends	• The agreed CSI [Customer Satisfaction Index] level shall be maintained or improved.

• Perform Supervision & Care and Corrective Maintenance according to the Supplier´s planned Maintenance Inspections schedules (see "Planning of Maintenance Inspections Schedule"– Schedule 9a FM1).	• Supplier is to carry out the assignment according to the policies and procedures established by ABB. Supplier is also to have a regular and ongoing dialogue with ABB´s manager for the service. • Plan and carry out all measures and initiatives in a professional manner, and in such a way, that the building´s standard is maintained, and that the building provides a safe working environment that remains safe. • The work is to be planned and carried out to minimize disturbances (for example, accessibility, noise, odors', etc.). • All measures and work are to be reported in Supplier´s Case and Helpdesk Management System. • All changes to the building and its installations are to be documented, and registered and updated in Supplier's Case and Helpdesk Management System. • Service 24/7 - outside of normal work hours, only incidents designated as Urgent and Critical are to be taken care of. • Ensure that users and equipment have a good environment with regard to temperature and moisture

Included services in Budget "Included service" - Service-description should be seen as information about what services are included and are not exhaustive in scope. All personnel must thus perform typical general duties related to the specific Schedule even if they are not listed in the Schedule and applies to all sites and service. Applies whether the task is possible to plan or "ad hoc".

Building Interior (supervision, care, inspection and corrective maintenance)

- Floors
- Interior walls
- Ceilings
- Windows - inside
- Doors, incl. fittings, locks and magnetic locks
- Doors, incl. manual and automatic door openers
- Automatic revolving doors, gates and barriers in the lease. Fire doors, incl. automatic system.
- Loose and fixed mounted equipment.
- Crane Tracks and Fall Protection Ropes
- Pest Control (birds and pests)
- Replacements of Lamps se Schedule 9d BGS 5

See objects and services listed in Schedule 9d.1

Schedule 9d - Building and Ground Services

BGS 3	Building´s Interior
Services not included in Supplier's budget (to be invoiced separately as specified in Schedule 2 – Pricing and Financial Provisions).	Services that are not included (Supplier is not responsible for the following services):
• Damage, incl. graffiti • Medium sized Maintenance Projects – work (craftsmen), Sub Suppliers and material – see Schedule 9d BGS.9	• Planned Large Maintenance Project and other Projects – normally handled by ABB, and ordered by ABB on a project basis, in open competition with other suppliers on the market – see also Schedule 9d BGS.9 • Clean-up work in connection with breakdowns/accidents – such as fires, water leaks, etc. Immediate and critical actions in connection with breakdowns/accidents are included in ABB's responsibility
Clarification	
Schedule 2 to the Supplement Site Data	

BGS 3						Building´s Interior
Responsibility			Included in Supplier´s budget.			Clarification
Function	Consumables	Equipment and accessories	Function	Consumables	Equipment and accessories	
Yes	Yes	Yes	Yes	Yes, except in Brazil	Yes, refer to clarification	• Supplier supplies clothing, tools, machinery, and protective equipment and transport equipment. • Supplier supplies consumables_(see § 1.8 above). • Supplier supplies material, Sub Supplier and performs the work for trouble-shooting maintenance and for small projects. • Supplier is responsible, signing contact and finance for service and on-call contracts with the necessary suppliers. • Supplier is responsible and finance for all measures, including inspections, requested by authorities, on condition that the cost is attributable to normal operations.

Schedule 9d - Building and Ground Services

BGS 4	HVAC incl. Cooling
Definition	
Perform technical property service of installations for water, heating, ventilation, cooling, gas, sprinkler and compressed air – please refer to Schedule 2 to the Supplement Site Data	
Service function requirements	Minimum acceptance criteria
• Daily follow up and executing of existing errands incoming during the night/weekends • Perform Supervision & Care and Corrective Maintenance according to the Supplier´s planned Maintenance Inspections schedules (see "Planning of Maintenance Inspections Schedule"– Schedule 9a FM1).	• The agreed CSI [Customer Satisfaction Index] level shall be maintained or improved. • Supplier is to carry out the assignment according to the policies and procedures established by ABB. Supplier is also to have a regular and ongoing dialogue with ABB´s manager for the service. • Plan and carry out all measures and initiatives in a professional manner, and in such a way, that the building´s standard is maintained, and that the building provides a safe working environment that remains safe. • The work is to be planned and carried out to minimize disturbances (for example, accessibility, noise, odor's, etc.). • All measures and work are to be reported in Supplier´s Case and Helpdesk Management System. • All changes to the building and its installations are to be documented, and registered and updated in Supplier's Case and Helpdesk Management System. • Service 24/7 - outside of normal work hours, only incidents designated as Urgent and Critical are to be taken care of. • The building is to have a good comfort level and minimum energy consumption. Energy consumption is to continuously show a trend of reduced energy usage – see energy statistics - Schedule 9b FM4 – Rolling 12 months (corrected for degree days). • The Building Management System is to be used in such a way that the building maintains a good level of comfort and utilizes a minimum amount of energy and ensure that users and equipment have a good environment with regard to temperature and moisture
Included services in Budget "Included service" - Service-description should be seen as information about what services are included and are not exhaustive in scope. All personnel must thus perform typical general duties related to the specific Schedule even if they are not listed in the Schedule and applies to all sites and service. Applies whether the task is possible to plan or "ad hoc".	
HVAC (supervision, care, inspection and corrective maintenance) • Heating • Cooling • Ventilation • Water (cold and hot) and Water treatment • Sewage/drain system, incl. grease and oil collectors (inside) • Compressed air • Gas • Sprinkler See objects and services listed in Schedule 9d.1 Schedule 2 to the Supplement Site Data	

Schedule 9d - Building and Ground Services

BGS 4	HVAC incl. Cooling
Services not included in Supplier´s budget (to be invoiced separately as specified in Schedule 2 – Pricing and Financial Provisions).	Services that are not included (Supplier is not responsible for the following services):
• Damage, incl. graffiti • Medium sized Maintenance Projects – work (craftsmen), Sub Suppliers and material – see Schedule 9d BGS.9	• Planned Large Maintenance Project and other Projects – normally handled by ABB, and ordered by ABB on a project basis, in open competition with other suppliers on the market – see also Schedule 9d BGS.9 • Clean-up work in connection with breakdowns/accidents – such as fires, water leaks, etc. Immediate and critical actions in connection with breakdowns/accidents are included in ABB's responsibility
Clarification	
Schedule 2 to the Supplement Site Data	

BGS 4						HVAC incl. Cooling
Responsibility			Included in Supplier´s budget.			Clarification
Function	Consumables	Equipment and accessories	Function	Consumables	Equipment and accessories	
Yes	Yes	Yes	Yes	Yes, except in Brazil	Yes, refer to clarification	• Supplier supplies clothing, tools, machinery, and protective equipment and transport equipment. • Supplier supplies consumables (see § 1.8 above). • Supplier supplies material, Sub Supplier and performs the work for trouble-shooting maintenance and for small projects. • Supplier is responsible, signing contact and finance for service and on-call contracts with the necessary suppliers. • Supplier is responsible and finance for all measures, including inspections, requested by authorities, on condition that the cost is attributable to normal operations.

BGS 5	Electricity installation
Definition	
Perform technical property service of electrical installations.	
Service function requirements	Minimum acceptance criteria
• Daily follow up and executing of existing errands incoming during the night/weekends • Perform Supervision & Care and Corrective Maintenance according to the Supplier´s planned Maintenance Inspections schedules (see "Planning of Maintenance Inspections Schedule"– Schedule 9a FM1).	• The agreed CSI [Customer Satisfaction Index] level shall be maintained or improved. • Supplier is to carry out the assignment according to the policies and procedures established by ABB. Supplier is also to have a regular and ongoing dialogue with ABB´s manager for the service. • Plan and carry out all measures and initiatives in a professional manner, and in such a way, that the building´s standard is maintained, and that the building provides a safe working environment that remains safe. • The work is to be planned and carried out to minimize disturbances (for example, accessibility, noise, odors', etc.). • All measures and work are to be reported in Supplier´s Case and Helpdesk Management System. • All changes to the building and its installations are to be documented, and registered and updated in Supplier's Case and Helpdesk Management System. • Service 24/7 - outside of normal work hours, only incidents designated as Urgent and Critical are to be taken care of. • Ensure that users and equipment have a good environment with regard to temperature and moisture
Included services in Budget "Included service" – Service -description should be seen as information about what services are included and are not exhaustive in scope. All personnel must thus perform typical general duties related to the specific Schedule even if they are not listed in the Schedule and applies to all sites and service. Applies whether the task is possible to plan or "ad hoc".	
Electricity Installation (supervision, care, inspection and corrective maintenance) • High voltage (excluded in certain sites) • Medium voltage • Low voltage • Auxiliary (backup) power (diesel) and UPS • Lighting systems • Emergency lighting system and warning light systems • Electric Heating System • Replacement of fluorescent lamps, electric bulb, other lighting sources, HF-devices, starters and batteries on an ad hoc basis and when periodic/planned replacements are scheduled, in operating spaces and general/common spaces like tenant areas (individual spaces), i.e. all places within building. Lighting Requirements (LUX) incl. instructions for replacing the lighting for each production shops, office areas, etc. should fulfill ABB requirements/demands See objects and services listed in Schedule 9d.1	

BGS 5	Electricity installation
Services not included in Supplier´s budget (to be invoiced separately as specified in Schedule 2 – Pricing and Financial Provisions).	Services that are not included (Supplier is not responsible for the following services):
• Damage, incl. graffiti • Medium sized Maintenance Projects – work (craftsmen), Sub Suppliers and material – see Schedule 9d BGS.9	• Planned Large Maintenance Project and other Projects – normally handled by ABB, and ordered by ABB on a project basis, in open competition with other suppliers on the market – see also Schedule 9d BGS.9 • Clean-up work in connection with breakdowns/accidents – such as fires, water leaks, etc. Immediate and critical actions in connection with breakdowns/accidents are included in ABB's responsibility
Clarification	
Schedule 2 to the Supplement Site Data	

BGS 5						Electricity installation
Responsibility			Included in Supplier´s budget.			Clarification
Function	Consumables	Equipment and accessories	Function	Consumables	Equipment and accessories	
Yes	Yes	Yes	Yes	Yes, except in Brazil	Yes, refer to clarification	• Supplier supplies clothing, tools, machinery, and protective equipment and transport equipment. • Supplier supplies consumables (see § 1.8 above). • Supplier supplies material, Sub Supplier and performs the work for trouble-shooting maintenance and for small projects. • Supplier is responsible, signing contact and finance for service and on-call contracts with the necessary suppliers. • Supplier is responsible and finance for all measures, including inspections, requested by authorities, on condition that the cost is attributable to normal operations.

BGS 6	Electricity installation – Low voltage - Security and Safety
Definition	
Perform technical property service of low voltage equipment installations and Safety and Security equipment **Note: Following System are not included in this Schedule** - Access Control system – See Schedule 9g Fire and Security - Intrusion and CCTV - See Schedule 9g Fire and Security - Fire protections system - See Schedule 9g Fire and Security - Fire Protection material – like Portable Fire Extinguisher, Signs of Fire, Evacuation Plans, Evacuation locks, Evacuation lights – see Schedule 9g Fire and Security	
Service function requirements	Minimum acceptance criteria
• Daily follow up and executing of existing errands incoming during the night/weekends • Perform Supervision & Care and Corrective Maintenance according to the supplier´s planned Maintenance Inspections schedules (see "Planning of Maintenance Inspections Schedule"– Schedule 9a FM1).	• The agreed CSI [Customer Satisfaction Index] level shall be maintained or improved. • Supplier is to carry out the assignment according to the policies and procedures established by ABB. Supplier is also to have a regular and ongoing dialogue with ABB´s manager for the service. • Plan and carry out all measures and initiatives in a professional manner, and in such a way, that the building´s standard is maintained, and that the building provides a safe working environment that remains safe. • The work is to be planned and carried out to minimize disturbances (for example, accessibility, noise, odors, etc.). • All measures and work are to be reported in Supplier´s Case and Helpdesk Management System. • All changes to the building and its installations are to be documented, and registered and updated in Supplier's Case and Helpdesk Management System. • Service 24/7 - outside of normal work hours, only incidents designated as Urgent and Critical are to be taken care of. • Ensure that users and equipment have a good environment with regard to temperature and moisture
Included services in Budget "Included service" – Service -description should be seen as information about what services are included and are not exhaustive in scope. All personnel must thus perform typical general duties related to the specific Schedule even if they are not listed in the Schedule and applies to all sites and service. Applies whether the task is possible to plan or "ad hoc".	
Electricity Installation – low voltage (supervision, care, inspection and corrective maintenance) • Alarm system See objects and services listed in Schedule 9d.1	

BGS 6	Electricity installation – Low voltage - Security and Safety
Services not included in Supplier´s budget (to be invoiced separately as specified in Schedule 2 – Pricing and Financial Provisions).	Services that are not included (Supplier is not responsible for the following services):
• Damage, incl. graffiti • Medium sized Maintenance Projects – work (craftsmen), Sub Suppliers and material – see Schedule 9d BGS.9	• Planned Large Maintenance Project and other Projects – normally handled by ABB, and ordered by ABB on a project basis, in open competition with other suppliers on the market – see also Schedule 9d BGS.9 • Clean-up work in connection with breakdowns/accidents – such as fires, water leaks, etc. Immediate and critical actions in connection with breakdowns/accidents are included in ABB's responsibility
Clarification	
Schedule 2 to the Supplement Site Data	

BGS 6						Electricity installation – Low voltage - Security and Safety
Responsibility			Included in Supplier´s budget.			Clarification
Function	Consumables	Equipment and accessories	Function	Consumables	Equipment and accessories	
Yes	Yes	Yes	Yes	Yes, except in Brazil	Yes, refer to clarification	Supplier supplies clothing, tools, machinery, and protective equipment and transport equipment. Supplier supplies consumables (see § 1.8 above). Supplier supplies material, Sub Supplier and performs the work for trouble-shooting maintenance and for small projects. Supplier is responsible, signing contact and finance for service and on-call contracts with the necessary suppliers. Supplier is responsible and finance for all measures, including inspections, requested by authorities, on condition that the cost is attributable to normal operations.

BGS 7	**Elevators and lifts and other Transport Systems**
Definition	
Perform technical property service of elevators and lifting devices.	
Service function requirements	Minimum acceptance criteria

• Daily follow up and executing of existing errands incoming during the night/weekends • Perform Supervision & Care and Corrective Maintenance according to the supplier´s planned Maintenance Inspections schedules (see "Planning of Maintenance Inspections Schedule"– Schedule 9a FM1).	• The agreed CSI [Customer Satisfaction Index] level shall be maintained or improved. • Supplier is to carry out the assignment according to the policies and procedures established by ABB. Supplier is also to have a regular and ongoing dialogue with ABB´s manager for the service. • Plan and carry out all measures and initiatives in a professional manner, and in such a way, that the building´s standard is maintained, and that the building provides a safe working environment that remains safe. • The work is to be planned and carried out to minimize disturbances (for example, accessibility, noise, odors', etc.). • All measures and work are to be reported in Supplier´s Case and Helpdesk Management System. • All changes to the building and its installations are to be documented, and registered and updated in Supplier's Case and Helpdesk Management System. • Service 24/7 - outside of normal work hours, only incidents designated as Urgent and Critical are to be taken care of. • Ensure that users and equipment have a good environment with regard to temperature and moisture

Included services in Budget "Included service" – Service -description should be seen as information about what services are included and are not exhaustive in scope. All personnel must thus perform typical general duties related to the specific Schedule even if they are not listed in the Schedule and applies to all sites and service. Applies whether the task is possible to plan or "ad hoc".

Elevators and lift (supervision, care, inspection and corrective maintenance)

- Elevators
- Lifts
- Waste handling and transport systems

• At each site Supplier is to have trained personnel for providing `First Line´ measures in connection with elevator breakdowns. Supplier is to have signed on-call and service agreements with an authorized elevator-service company. For smaller sites, resources can be shared as long as response times are maintained

See objects and services listed in Schedule 9d.1

BGS 7	Elevators and lifts and other Transport Systems
Services not included in Supplier's budget (to be invoiced separately as specified in Schedule 2 – Pricing and Financial Provisions).	Services that are not included (Supplier is not responsible for the following services):
• Damage, incl. graffiti • Medium sized Maintenance Projects – work (craftsmen), Sub Suppliers and material – see Schedule 9d BGS.9	• Planned Large Maintenance Project and other Projects – normally handled by ABB, and ordered by ABB on a project basis, in open competition with other suppliers on the market – see also Schedule 9d BGS.9 • Clean-up work in connection with breakdowns/accidents – such as fires, water leaks, etc. Immediate and critical actions in connection with breakdowns/accidents are included in ABB's responsibility
Clarification	
Schedule 2 to the Supplement Site Data	

BGS 7						Elevators and lifts and other Transport Systems
Responsibility			Included in Supplier´s budget.			Clarification
Function	Consumables	Equipment and accessories	Function	Consumables	Equipment and accessories	
Yes	Yes	Yes	Yes	Yes, except in Brazil	Yes, refer to clarification	• Supplier supplies clothing, tools, machinery, and protective equipment and transport equipment. • Supplier supplies consumables (see § 1.8 above). • Supplier supplies material, Sub Supplier and performs the work for trouble-shooting maintenance and for small projects. • Supplier is responsible, signing contact and finance for service and on-call contracts with the necessary suppliers. • Supplier is responsible and finance for all measures, including inspections, requested by authorities, on condition that the cost is attributable to normal operations.

BGS 8	Building Control Management and Energy Optimization
Definition	
Perform technical property service of installations - Building Control Management and Energy Efficiency	
Service function requirements	Minimum acceptance criteria
• All energy consumption is to be continuously monitored and optimized, using existing systems. Supplier to propose installation of systems to ABB in sites where such a system does not exist • Daily follow up and executing of existing errands incoming during the night/weekends • Perform Supervision & Care and Corrective Maintenance according to the supplier´s planned Maintenance Inspections schedules (see "Planning of Maintenance Inspections Schedule"- Schedule 9a FM1). .	• The agreed CSI [Customer Satisfaction Index] level shall be maintained or improved. • Supplier is to carry out the assignment according to the policies and procedures established by ABB. Supplier is also to have a regular and ongoing dialogue with ABB´s manager for the service. • Plan and carry out all measures and initiatives in a professional manner, and in such a way, that the building´s standard is maintained, and that the building provides a safe working environment that remains safe. • The work is to be planned and carried out to minimize disturbances (for example, accessibility, noise, odor's, etc.). • All measures and work are to be reported in Supplier´s Case and Helpdesk Management System. • All changes to the building and its installations are to be documented, and registered and updated in Supplier's Case and Helpdesk Management System. • Service 24/7 - outside of normal work hours, only incidents designated as Urgent and Critical are to be taken care of. • The building is to have a good comfort level and minimum energy consumption. Energy consumption is to continuously show a trend of reduced energy usage – see energy statistics - Schedule 9b FM4 – Rolling 12 months (corrected for degree days). • The Building Management System is to be used in such a way that the building maintains a good level of comfort and utilizes a minimum amount of energy.
Included services in Budget "Included service" – Service -description should be seen as information about what services are included and are not exhaustive in scope. All personnel must thus perform typical general duties related to the specific Schedule even if they are not listed in the Schedule and applies to all sites and service. Applies whether the task is possible to plan or "ad hoc".	
Building Management (BMS) (supervision, care, inspection and corrective maintenance) • Building Management System • Controller • Control equipment • Lightening Control • The Building Management System is to be used in such a way that the building maintains a good level of comfort and utilizes a minimum amount of energy. • All temperatures and operating times are to be continuously monitored and optimized. Supplier is to optimize all HVAC and lighting systems four (4) times/year – set times and temperatures are to documented and reported to ABB at quarterly meetings.	

- Supplier is to read all media meters (water, gas, oil, heating, cooling) on a monthly basis (unless required less frequently (e.g. quarterly)) – meter readings are to be managed in Supplier's Case and Helpdesk Management System. Meter readings are to be used as the basis for producing monthly media statistics – Schedule 9b FM4
- Ensure that the building is to have a good comfort level and minimum energy consumption, define min/max temperature with ABB to achieve these results. Energy consumption is to continuously show a trend of reduced energy usage – see energy statistics - Schedule 9b FM4 – Rolling 12 months (corrected for degree days).

See objects and services listed in Schedule 9d.1

BGS 8	**Building Control Management and Energy Optimization**
Services not included in Supplier´s budget (to be invoiced separately as specified in Schedule 2 – Pricing and Financial Provisions).	Services that are not included (Supplier is not responsible for the following services):
• Damage, incl. graffiti • Medium sized Maintenance Projects – work (craftsmen), Sub Suppliers and material – see Schedule 9d BGS.9	• Planned Large Maintenance Project and other Projects – normally handled by ABB, and ordered by ABB on a project basis, in open competition with other suppliers on the market – see also Schedule 9d BGS.9 • Clean-up work in connection with breakdowns/accidents – such as fires, water leaks, etc. Immediate and critical actions in connection with breakdowns/accidents are included in ABB's responsibility
Clarification	
Schedule 2 to the Supplement Site Data	

BGS 8						**Building Control Management and Energy Optimization**
Responsibility			Included in Supplier´s budget.			Clarification
Function	Consumables	Equipment and accessories	Function	Consumables	Equipment and accessories	
Yes	Yes	Yes	Yes	Yes, except in Brazil	Yes, refer to clarification	• Supplier supplies clothing, tools, machinery, and protective equipment and transport equipment. • Supplier supplies consumables (see § 1.8 above). • Supplier supplies with Energy statistic software • Supplier supplies material, Sub Supplier and performs the work for trouble-shooting maintenance and for small projects. • Supplier is responsible, signing contact and finance for service and on-call contracts with the necessary suppliers. • Supplier is responsible and finance for all measures, including inspections, requested by authorities, on condition that the cost is attributable to normal operations.

Schedule 9d - Building and Ground Services

BGS 9	**Building Service and Ground Maint. Management Project** (Maintenance and Upgrade)
Definition	
Execution of Medium-sized Maintenance projects for ABB's account.	
Service function requirements	Minimum acceptance criteria
Facilities and Property projects in ABBs sites depending on: • Upgrade of technology • Exchange of obsolete or worn equipment • Maintenance See objects and services listed in Schedule 9d.1	• The agreed CSI [Customer Satisfaction Index] level shall be maintained or improved. • Supplier is to carry out the assignment according to the policies and procedures established by ABB. Supplier is also to have a regular and ongoing dialogue with ABB's manager for the service. • Plan and carry out all measures and initiatives in a professional manner, and in such a way, that the building's standard is maintained, and that the building provides a safe working environment that remains safe. • The work is to be planned and carried out to minimize disturbances (for example, accessibility, noise, odors, etc.). • All measures and work are to be reported in Supplier's Case and Helpdesk Management System. • All changes to the building and its installations are to be documented and updated in Supplier's Case and Helpdesk Management System.
Included services "Included service" – Service -description should be seen as information about what services are included and are not exhaustive in scope. All personnel must thus perform typical general duties related to the specific Schedule even if they are not listed in the Schedule and applies to all sites and service. Applies whether the task is possible to plan or "ad hoc".	
• Project management, including preparation of requirement specifications, planning, contracting and management of contracts for renovations and refurbishments of leases. • Contact for future use representative regarding any specific requirements and wishes • Coordination of related techniques such as Access Control, Intrusion Alarm, 4G coverage, LAN, switches, etc. • Develop logistics and schedules for projects. • Ensure Value for Money" and correct quality level corresponding to ABB's standard.	

	(Maintenance and Upgrade)
Services not included in Supplier's budget (to be invoiced separately as specified in Schedule 2 – Pricing and Financial Provisions).	Services that are not included (Supplier is not responsible for the following services):
The Medium Maintenance projects are carried out either: • Option 1 - Fixed agreed price • Option 2 - Current account - pricing in compliance with Schedule 2 – Pricing and Financial Provisions	Projects exceeding US $10,000 per project.

Clarifications

Schedule 2 to the Supplement Site Data

Small Maintenance Project Building Service and Ground Services - Project (maximum US $2,500) are included in Schedule 9d Building Service and Ground (BGS.1 – BGS.8)
Projects valued at less than US $2,500 per occasion and tasks are included in Supplier's Budget in cases when projects exceed US $2,500 per occasion and task, ABB will pay for the surplus amount. Execution of small project should include project management, man-hour (craftsmen), materials, subcontractors, travel should be included in Budget. (Note Small Maintenance Project are not limited to Corrective Maintenance)

Medium Sized Maintenance Project - Project US $2,500 – $10,000 are included in this Schedule 9d (BGS.9)
Note that this service generally applies to maintenance projects that are "medium-sized" and valued at US $2,500 -10,000 per project.

Larger Maintenance projects (>US $10,000/project) are normally handled by ABB, and ordered by ABB on a project basis, in open competition with other suppliers on the market.

Non Maintenance project – normally refurbishment, upgrade and new building - are normally handled by ABB, and ordered by ABB on a project basis, in open competition with other suppliers on the market.

BGS.9						**Building Service and Ground Maint. Management Project** (Maintenance and Upgrade)
Responsibility			Included in Supplier's budget.			Clarification
Function	Consumables	Equipment and accessories	Function	Consumables	Equipment and accessories	
Yes	Yes	Yes	Yes	Yes, except in Brazil	Yes, refer to clarification	• ABB supplies computers and printers to Supplier when work will be performed on ABB's premises. • Supplier supplies mobile phones and PDAs.

Snow and ice removal services are not applicable in Brazil.

3 Evaluation

Section 3 from Schedule 9a applies to this Schedule.

4 Quality and performance requirements

4.1 General

ABB expects seamless service delivery and the quality requirements presented by ABB in this Schedule shall be adhered to. During the contract period, ABB has the option of making adjustments to specified quality requirements/quality levels in cooperation with Supplier.

4.2 Handling Issues (orders, faults and queries, etc.)

Within services, the Supplier shall receive cases from ABB and ABB staff. Matters shall normally be handled within the framework of the described service in Service Desk. All cases received should be recorded and reported in accordance with the Agreement.

To facilitate a real priority in the handling of cases for ABB is defined four types of criticalities, Urgent, Critical, Serious and Other Matters. Urgent Matters and Critical Issues should always be prioritized and handled before all other cases. In conflicts between Urgent issues and Critical issues, urgent matters should always take precedence. Urgent issues involving danger to life and property (Priority 1a) must always be given priority over emergency issues with the risk of downtime (Priority 1b)

4.2.1 Urgent Matters and Critical Issues

The table below describes the Service Levels for Urgent Issues and Critical Issues:

Priority	Criticality	Response Time	Resolution Time
1a	Urgent – Danger to life and property	Immediate during working hours **Non Working Hours:** Two (2) hours	Immediate during working hours **Non Working Hours:** Immediate after Response Time
1b	Urgent - Process Critical Equipment (or process)	Immediate during working hours **Non Working Hours:** Two (2) hours	Immediate during working hours **Non Working Hours:** Immediate after Response Time
2	Critical	30 minutes during working hours **Non Working Hours:** Two (2) hours	Two (2) hours during working hours **Non Working Hours:** Three (3) hours

To facilitate understanding of the above table, the table below with the Definitions and concepts laid out in this Schedule:
At Non Working Hours, utilize ABB's Process Task Force (acute jour) for Urgent and Critical Issues first, if available on site. Regardless who is contacting the Supplier during Non-Working Hours the Response time must be within 2 hours.

For all Urgent Matters and Critical Issues, a root cause analysis must be performed to minimize the risk that the matter will come back and to draw lessons to other matters.

For the requests to be Urgent or Critical, the requests need to be called in by phone to the Service Desk. A number of questions that will be asked and will form the basis for the assessment of the requests that are Critical, or Urgent. These issues will be developed during the implementation project. The Service Desk is responsible for putting a case as Urgent, Critical, Serious or Other.

Schedule 9d - Building and Ground Services

To aid in the understanding of Critical Issues, the following is a list of examples of events that ABB considers Critical Issues. The list should not be considered complete or exhaustive, it should only be used to describe the type of event ABB regards as Critical Issues.

- Failure of an important gate or door
- Failure of some important cooling systems
- Clogged dust filter
- Breach on the crane rails
- Water Leaking pipes
- Water Leaking roofs

4.2.2 Serious Matters

Serious matters are defined as matters, which either do not directly impact financial position, market position, and image or threaten life, property or which may cause severe personal injury, but achieve serious productivity loss and other serious disturbances in the daily work on the site

The Response times and resolution times for handling these matters are specified in the table below.

Service levels for Serious Matters

Service	Response time	Resolution time
BGS1 – Ground Service	4 Working hours	8 Working Hours
BGS2 – Building Exterior	4 Working hours	8 Working Hours
BGS3 – Building Interior	2 Working hours	4 Working Hours
BGS4 – HVAC incl. Cooling	2 Working hours	4 Working Hours
BGS5 - Electricity installation	1 Working hour	4 Working Hours
BGS6 – Electricity installation – Low voltage	2 Working hours	4 Working Hours
BGS7 - Elevators and lifts	1 Working hour	4 Working Hours
BGS8 – Building Control Management and Energy Optimization	1 Working hour	4 Working Hours
BGS9 - Building and Landscaping/Ground Project Management	4 Working hours	2 Working Days

If Serious Matters are not completed, or where an action plan is not developed, within the agreed Resolution Time ABB shall inform the Supplier in writing about this. As the Supplier received this information, the Supplier then reduced Resolution Time for addressing or preparation of action plan. The reduced Resolution Time is estimated that half of those in table 4.2.2 above Resolution Time. Other matters that have not been rectified, or where the action plan not been produced within the reduced Resolution Time are addressed from a performance management point as Critical Issue.

4.2.3 Other Matters

Other Matters are defined as requests that do not directly create an economic, market, image or serious productivity loss and other serious disturbances in the daily work on the site.
The handling thereof for Response and Resolution Time is specified in the table below.

Other Matters	Response time	Resolution time
Other Matters	4 Working hours	5 Working Days

If an Other Matters are not completed, or where the action plan is not developed, within the agreed Resolution Time ABB shall inform the Supplier in writing about this. As the Supplier received this information, the Supplier then reduced Resolution Time for addressing or preparation of action plan. The Resolution Time is estimated that half of those in table 4.2.3 above Resolution Time. Other matters that have not been rectified, or where the action plan not been produced within the reduced Resolution Time are addressed from a performance management point as Critical Issue.

DEFINITIONS

Please refer to Definition Section from Schedule 9a

'TS CORPORATION
REET
303

PLACE STICKER AT TOP OF ENVELOPE TO THE RIGHT
OF THE RETURN ADDRESS, FOLD AT DOTTED LINE

CERTIFIED MAIL™

7013 0600 0001 0259 9676

UNITED STATES POSTAGE
PITNEY BOWES
$ 012.75⁰
02 1P
0004639452 JAN 09 2018
MAILED FROM ZIP CODE 37303

TENNESSEE AIR PERMIT PROGRAM
DIVISION OF AIR POLLUTION CONTROL
WILLIAM R. SNODGRASS TENNESSEE TOWER
312 ROSA L. PARKS AVE; 15TH FLOOR
NASHVILLE, TN 37243